This is a digital copy of a book that was preserved for generations on library shelves before it was carefully scanned by Google as part of a project to make the world's books discoverable online.

It has survived long enough for the copyright to expire and the book to enter the public domain. A public domain book is one that was never subject to copyright or whose legal copyright term has expired. Whether a book is in the public domain may vary country to country. Public domain books are our gateways to the past, representing a wealth of history, culture and knowledge that's often difficult to discover.

Marks, notations and other marginalia present in the original volume will appear in this file - a reminder of this book's long journey from the publisher to a library and finally to you.

Usage guidelines

Google is proud to partner with libraries to digitize public domain materials and make them widely accessible. Public domain books belong to the public and we are merely their custodians. Nevertheless, this work is expensive, so in order to keep providing this resource, we have taken steps to prevent abuse by commercial parties, including placing technical restrictions on automated querying.

We also ask that you:

+ *Make non-commercial use of the files* We designed Google Book Search for use by individuals, and we request that you use these files for personal, non-commercial purposes.

+ *Refrain from automated querying* Do not send automated queries of any sort to Google's system: If you are conducting research on machine translation, optical character recognition or other areas where access to a large amount of text is helpful, please contact us. We encourage the use of public domain materials for these purposes and may be able to help.

+ *Maintain attribution* The Google "watermark" you see on each file is essential for informing people about this project and helping them find additional materials through Google Book Search. Please do not remove it.

+ *Keep it legal* Whatever your use, remember that you are responsible for ensuring that what you are doing is legal. Do not assume that just because we believe a book is in the public domain for users in the United States, that the work is also in the public domain for users in other countries. Whether a book is still in copyright varies from country to country, and we can't offer guidance on whether any specific use of any specific book is allowed. Please do not assume that a book's appearance in Google Book Search means it can be used in any manner anywhere in the world. Copyright infringement liability can be quite severe.

About Google Book Search

Google's mission is to organize the world's information and to make it universally accessible and useful. Google Book Search helps readers discover the world's books while helping authors and publishers reach new audiences. You can search through the full text of this book on the web at `http://books.google.com/`

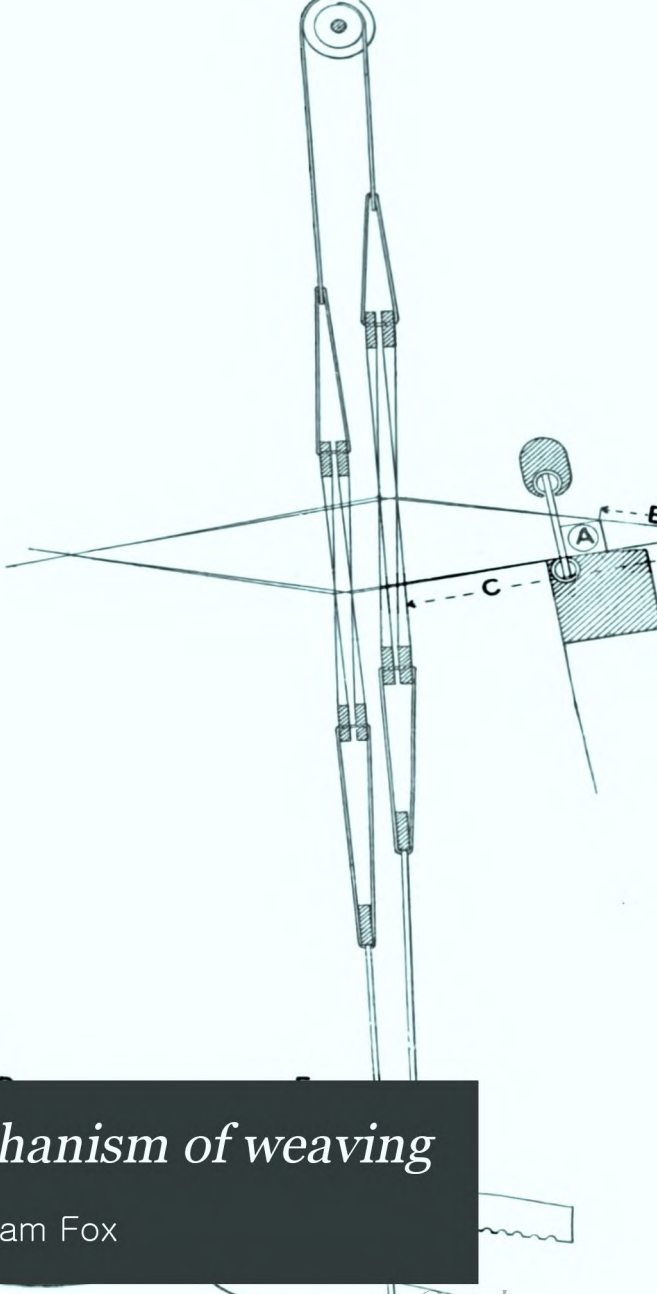

The mechanism of weaving

Thomas William Fox

Digitized by Google

1908.94

HARVARD COLLEGE
LIBRARY

FROM THE BEQUEST OF

EDWIN CONANT

Class of 1829

OF WORCESTER, MASSACHUSETTS

Digitized by Google

Digitized by Google

Digitized by Google

THE MECHANISM OF WEAVING

Digitized by Google

8188
52-93
16

Digitized by Google

THE MECHANISM

OF

WEAVING

BY

T. W. FOX

LECTURER ON TEXTILE FABRICS, MUNICIPAL TECHNICAL SCHOOL
MANCHESTER

London
MACMILLAN AND CO.
AND NEW YORK
1894

All rights reserved

Digitized by Google

~~VT. 8233~~

Tec. 1908, 94

HARVARD COLLEGE
JAN 23 1895
LIBRARY.

Tolman fund

Digitized by Google

PREFACE

WHEN the hand-loom was in general use weaving mechanism was of a comparatively simple type, and weaving depended almost entirely upon the handicraft skill of the weaver; but with the introduction of the power-loom the whole system was changed, and weaving practically became a new industry. With new machinery, and new processes, a want of definite information respecting their true functions and actions was keenly felt, and books began to be published which dealt with the more pressing problems. Nevertheless, when an impetus was given to technical education by the establishment of technical schools, a great lack of this class of literature was fully revealed.

During recent years several admirable books have been written on weaving, but it has been too much the custom to consider designing, fabric structure, and calculations relating thereto, as the only important parts of the subject. Hence, only one treatise has appeared within the last twenty years in which the mechanical side of weaving has not been subordinated to the structural side.

Digitized by Google

The present treatise is designed to supply this deficiency, and to place within the reach of the student, in as comprehensive a manner as possible, exact and practical information bearing upon the principles of weaving as exemplified in the various processes of the trade. If this book meets the want, and assists in some small degree to give the workman of the present day a better knowledge of those branches of the textile industry that lie outside the one he is most familiar with, the author will feel that his labour has not been altogether wasted.

Even assuming a writer to possess a thorough acquaintance with every branch of weaving, to which the present author lays no claim, it would be manifestly impossible, within the compass of such a volume as this, to enter into particulars that would make the student fully conversant with all the mechanism employed. Some branches have been unavoidably passed over, but an effort has been made to include the leading types of weaving machinery.

The illustrations have been mainly prepared from machines and appliances now in use at the Municipal Technical School, Manchester.

The best thanks of the author are heartily tendered to Mr. J. Allison and Mr. J. H. Cummins for valuable assistance rendered in the preparation of this work; also to the printers and publishers.

MANCHESTER, *September* 1894.

Digitized by Google

CONTENTS

PART I

INTRODUCTION

PAGE

THE POWER-LOOM 1

PART II

HEALDS 3

PART III

SHEDDING OR DIVIDING THE WARP 18
Tappets 24
Jamieson's Tappet 43
The Barrel Tappet 45
Positive Tappets 47
Woodcroft's Tappet 49
Oscillating Tappet 54
Nuttall's Chain 57
Tappet Driving 58

PART IV

OVER AND UNDER MOTIONS 61
Single Acting Motions 62
Spring-easing Motions 66

Digitized by Google

PAGE
Kenyon's Under-motion 67
Compound Motions 68

PART V

Dobby Shedding 79
Centre Shed Dobby 95
Double Lift Dobbies 96
The Blackburn Dobby 97
Keighley Dobby 102
Butterworth and Dickenson's Modification — The Burnley Dobby 107
Positive Closed Shed Dobby 110
Positive Open-shed Dobby 113

PART VI

Jacquard Shedding 119
Single Lift Jacquards 122
Centre-shed Jacquards—Double Lift, Single Cylinder . 138
Double Cylinder Machines 146
Green and Barker's Stop-motion 149
Devoge's Stop-motion 151
Open-shed Jacquards 152
Card-saving Machines 156
Cross-border Machines 157
Double-shed Machine 160
Two Patterns on one Set of Cards—Compound Machines . 162
The Verdol Jacquard 164
The Bessbrook Jacquard 167
Electric Jacquard 172
Machine Lifts 176

PART VII

The Figuring Harness 179
Building a Harness 184

Digitized by Google

PAGE

Dressing a Harness 191
Defective Shedding 192
Tie-ups—Straight Ties 193
Centred Ties 195
Mixed Ties—Compound Ties 197
Double Equal Plain Cloth Tie 201
Split or Double Scale Harness 203
Pressure Harness 206
Gauze Weaving 209
Gauze Harnesses 215
Bottom Doup Harness 216
Top Doups 222
Doup Harness in Two Sections 223
Wilkinson's Harness 226

PART VIII

CARD-CUTTING 227
Reading-in Machine 230
Reading-in and Repeating Machine 232
Vertical Punch Reading-in and Repeating Machine . . 234
Devoge & Co.'s Automatic Repeater 236
M'Murdo's Repeater 238
Nuttall's Repeater 239
Piano Card-cutting Machine 241
Card-lacing 246
Lacing-Machines 248
Card-wiring 249
Card Cradles 250

PART IX

LAPPET SHEDDING 250

PART X

PICKING 265
Picking from the Crank Shaft 288

*

Digitized by Google

PAGE
Scroll Picks 291
Over-picks 296
Positive Picking 305

PART XI

PICKERS 307
Strapping—Picking Bands 309
The Check Strap 311
Buffers 312

PART XII

SWIVEL-WEAVING 313
Circles 317

PART XIII

WARP-PROTECTORS, OR FAST AND LOOSE REED MOTIONS . 318
Loose Reed Looms 322

PART XIV

SHUTTLE-GUARDS 326
Marriott's Guard 328
Hamblet & Clifton—Automatic Guards . . . 329

PART XV

BEATING UP 332

PART XVI

THE REED 349

Digitized by Google

PART XVII

PAGE
MOTIONS TO STOP THE LOOM IF WEFT IS ABSENT . . 352
The Brake 357
Centre Weft Fork 361

PART XVIII

MECHANISM FOR GOVERNING WARP 365

PART XIX

TAKING-UP MOTIONS 380

PART XX

BOX MOTIONS 393
Negative Drop Boxes—Diggle's Chain . . . 394
Smith's Modification 398
Honegger's Drop Box 400
Knowles's Chain 403
Positive Drop Boxes—Wright Shaw's . . . 405
The Eccentric Motion 411
Cowburn & Peck's Motion 416
Circular Boxes 423

PART XXI

TEMPLES 427
Single-Roller Temples 430
Two-Roller Temples—Three-Roller Temples . . . 432
Inclined Rings 433
Horizontal Ring 435

PART XXII

CENTRE AND SIDE SELVAGES 436
Plain Side Selvages 445

Digitized by Google

PART XXIII

PAGE
TIMING AND FIXING OF PARTS 448

PART XXIV

WEAVING ROOMS OR SHEDS 457

INDEX 465

Digitized by Google

LIST OF ILLUSTRATIONS

FIG.		PAGE
1.	Greek Healds	5
2.	Clasped Healds	6
3.	Eyed Healds	11
4.	Calico Draft	13
5.	Point Draft	14
6.	Spaced Draft	14
7.	Compound Draft	15
8.	Broken Draft	16
9.	Stationary Bottom Shed	19
10.	Centre Shed	20
11.	Open Shed	21
12.	Semi-open Shed	22
13.	Section of Plain Shedding Motion	26
14.	Heald Connections for Positive Shedding	28
15.	Tie-up for Tappet Shedding	30
16.	,, ,,	30
17.	Section of Plain Shedding, for making Calculations	31
18.	Section of Yorkshire Shedding Motion	33
19.	Positive Shedding Motion, for making Calculations	34
20.	Diagram to illustrate Strain upon Warp in Shedding	36
21.	Diagram to determine Dwell for a Tappet	38
22.	Tappet Construction—Plain Cloth	39
23.	,, ,, Three-shaft Twill	40
24.	,, ,, Four-shaft Twill	41
25.	,, ,, ,, ,,	42
26.	Jamieson's Tappet	44
27.	Barrel Tappet	46
28.	Positive Tappet for Six-shaft Twill	48

Digitized by Google

FIG.		PAGE
29.	Woodcroft's Tappet	49
30.	Plan for laying a Woodcroft Tappet	50
31.	Ring for Woodcroft Tappet	51
32.	Open Shed Woodcroft Tappet	52
33.	Heald Connections for Woodcroft Tappet	53
34.	Section of Oscillating Tappet	55
35.	Driving for Oscillating Tappet	56
36.	Section of Nuttall's Chain Tappet	57
37.	Tappet Driving	59
38.	Single Acting Under Motion with Springs	63
39.	,, ,, ,, Jacks	64
40.	Hahlo, Liebreich, and Hanson's Spring-easing Motion	66
41.	Kenyon's Spring-easing Under Motion	68
42.	Separate Roller Compounded Over Motion for Plain Cloth	70
43.	,, ,, ,, ,, Four Shafts	70
44.	Compounded Lever Under Motion for Four Shafts	71
45.	Compounded Roller and Lever Under Motion for Eight Shafts	72
46.	Compounded Roller Over Motion for Four Shafts	72
47.	,, Lever Under Motion for Three Shafts	73
48.	,, Roller ,, ,, ,,	74
49.	,, ,, and Lever Under Motion for Three Shafts	75
50.	,, ,, Over Motion for Three Shafts	75
51.	Front and End Elevations of Five-shaft Under Motion	76
52.	End View of Five-shaft Roller Over Motion	77
53.	Roller and Lever Under Motion for Seven Shafts	77
54.	Diagram showing movement of Warp when actuated by Closed Shedding and Under Motions	78
55.	Single Lift Dobby	82
56.	,, Griffe fulcrumed	85
57.	,, Hooks pushed on Griffe	86
58.	,, Archer's Dobby	87
59.	,, Swinging Cylinder Motion	89
60.	,, Ball's Rotary Cylinder Motion	91
61.	,, Rotary Cylinder Motion	92
62.	Dobby Pegs	93
63.	Lag Pegging for Right and Left Hand Dobbies	94
64.	Centre Shed Dobby	96
65.	Blackburn Dobby (rear end view)	99
66.	,, ,, (front ,,)	100

Digitized by Google

FIG.		PAGE
67.	Blackburn Dobby (sectional elevation)	101
68.	Ward's Dobby	103
69.	Butterworth and Dickenson's Modification of Keighley Dobby	106
70.	Burnley Dobby	108
71.	Christy's Positive Closed Shed Dobby	111
72.	Knowles's Positive Open Shed Dobby (driving)	114
73.	,, ,, ,, (sectional elevation)	116
74.	Jacquard Swinging Cylinder Motion	123
75.	,, Sliding ,,	126
76.	Goos's ,, ,,	128
77.	Jacquard Needle	129
78.	End View of Jacquard Machine	130
79.	Modern Jacquard Hook	134
80.	,, ,, Needle	135
81.	Goos's Hook	136
82.	Ainsley's Centre Shed Jacquard	137
83.	Lambert's Double Lift, Single Cylinder Jacquard	140
84.	Crossley's ,, ,, ,,	142
85.	,, ,, ,, ,, Needle	143
86.	Double Cylinder Jacquard	147
87.	Green and Barker's Stop Motion for Double Cylinder Jacquards	150
88.	Devoge's Stop Motion for Double Cylinder Jacquards	151
89.	Cheetham and Sutcliffe's Open Shed Jacquard	154
90.	Davenport and Crossley's Cross-border Jacquard	158
91.	,, Cylinder Motion for Cross-border Jacquard	160
92.	Howarth and Pearson's Double Shed Jacquard	161
93.	Compound Jacquard	163
94.	Verdol's Small Gauge Jacquard	165
95.	Bessbrook Jacquard, Hooks, Needles, Griffe, and Twilling Bars	169
96.	Bessbrook Jacquard, End View	170
97.	Bonelli's Electric Jacquard	174
98.	Jacquard Machine Lift	178
99.	Harness Warping Rail	185
100.	,, Building Rods	186
101.	,, Knots	188
102.	,, Straight Tie	194

Digitized by Google

FIG.		PAGE
103.	Harness Straight Tie (large and small combined)	194
104.	,, Centred Tie	196
105.	,, ,, for Straight Leasing	196
106.	,, Compound Equal Tie in two Sections	198
107.	,, ,, Unequal Tie ,,	198
108.	,. Draft for Compound Unequal Tie in three Sections	199
109.	,, Plan ,, ,, two ,,	200
110.	End View of Double Equal Plain Cloth Tie	202
111.	Plan ,, ,, ,,	203
112.	Bannister Harness	204
113.	Pressure Harness	208
114.	Gauze Draft and Tie	210
115.	„ Standard and Doup for Open Shed	211
116.	„ „ „ Cross Shed	211
117.	„ with two Half Healds and Bead	212
118.	Lappet Shaft for Gauze Weaving	213
119.	Doup-easer lifted by Jacquard	214
120.	„ depressed by Tappet Treadle	215
121.	Bottom Doup Harness	217
122.	Plan of Bottom Doup Harness	220
123.	Shaker for Heald Douping	221
124.	Plan of Top Doup Harness	222
125.	Doup Harness in two Sections	224
126.	Plan of Doup Harness in two Sections	225
127.	Wilkinson's Harness	226
128.	Hand Repeater Card-cutting Machine	229
129.	Reading-in Machine	231
130.	Reading-in and Repeating Machine with Horizontal Punch	233
131.	Reading-in and Repeating Machine with Vertical Punch	235
132.	Devoge's Automatic Repeater	237
133.	M'Murdo's ,, ,,	239
134.	Nuttall's ,, ,,	240
135.	Side Elevation of Piano Card-cutting Machine	242
136.	Plan of Headstock Piano Card-cutting Machine	243
137.	Front Elevation of Headstock Piano Card-cutting Machine	244
138.	Plan of Carriage Piano Card-cutting Machine	245
139.	Card Lacing and Wiring	247
140.	Front Elevation of Lappet Frame	252

Digitized by Google

FIG.		PAGE
141.	Side Elevation of Lappet Frame	253
142.	Design for Lappet Weaving	254
143.	Construction of Lappet Wheel	255
144.	Needle Frame for Lappets	256
145.	Spring Tension Cords for Lappets	259
146*a*.	Design for Lappet	260
146*b*.	Construction of Scotch Lappet Wheel	261
147.	Diagram of Shuttle illustrating Effect of Direction of Force	268
148.	,, ,, ,, ,,	268
149.	Diagram representing Effect of Side Pull of Weft upon Shuttle	269
150.	,, ,, ,, ,,	270
151.	Diagram illustrating Movement of Shuttle	272
152.	,, ,, Compound Movement of Shuttle	273
153.	,, ,, ,, ,, ,,	273
154.	Strap Attachment to remove Pressure of Swell from Shuttle at Time of Picking	275
155.	Front Elevation of Lever Pick	279
156.	End ,, ,,	280
157.	Construction of Picking Plate for Lever Pick	282
158.	Plan of Lever Pick for Pick and Pick Motion	284
159.	Front Elevation of Lever Pick for Pick and Pick Motion	285
160.	Back ,, ,, ,, ,,	285
161.	Plan of Jackson's Under Pick	286
162.	Elevation of ,, ,,	286
163.	Front Elevation of Carpet Pick	289
164.	Side ,, ,,	289
165.	Front Elevation of Yates's Under Pick	290
166.	Side ,, ,, ,,	290
167.	Front ,, Swivel ,,	291
168.	Side ,, ,, ,,	291
169.	Front ,, Stationary Scroll Under Pick	292
170.	Side ,, ,, ,, ,,	293
171.	Construction of Scroll for Under Pick	294
172.	Front Elevation of Revolving Scroll Under Pick	294
173.	Side ,, ,, ,,	295
174.	Plan and Elevation of Cone Over Pick	297
175.	Construction of Cone Picking Tappet	303
176.	Front Elevation of Lyall's Positive Picking Motion	306

Digitized by Google

FIG. PAGE
177. Enlarged View of Shuttle and Carriage of Lyall's Positive Picking Motion 306
178. The Check Strap 312
179. Plan and Elevation of Fast Reed Motion . . . 319
180. Collier, Evans, and Riley's Swell for Fast Reed Motion . 320
181. Loose Reed Motion 323
182. Plan View of Harker and Grayson's Loose Reed Swell . 325
183. ,, ,, ,, ,, ,, . 325
184. Marriott's Shuttle Guard 328
185. Front Elevation of Farrell's Automatic Shuttle Guard . 330
186. Side ,, ,, ,, ,, . 331
187. End Elevation of Beating-up Mechanism . . . 335
188. Beam, Crank, and Connecting Arm of Steam-Engine . 337
189. Diagram for determining the Position of Crank Centre . 339
190. Diagram showing the Eccentric Motion of a Slay . . 340
191. Graphic Sketch for determining the Amount of Eccentricity in a Slay 341
192. Slay and Connections for Double Beat 348
193. ,, ,, ,, ... 348
194. The Reed 350
195. Side Elevation of Weft Fork 354
196. Plan ,, ,, ... 355
197. Front Elevation of Ordinary Brake 357
198. Side ,, ,, ... 357
199. Front Elevation of Haythornethwaite's Double Brake . 359
200. Plan of Haythornethwaite's Double Brake . . . 360
201. Plan of Centre Weft Fork 362
202. Front Elevation of Centre Weft Fork 363
203. Side ,, ,, ,, ... 364
204. Warp Beam with Morticed Holes and Rod . . . 366
205. Rope and Weight Letting-off Motion 367
206. Schilling's Automatic Warp Weighting Motion . . 372
207. Front Elevation of Hanson and Crabtree's Automatic Warp Weighting Motion 373
208. End Elevation of Hanson and Crabtree's Automatic Warp Weighting Motion 374
209. Side Elevation of Smith's Automatic Letting-off Motion. 375
210. Plan ,, ,, ,, ,, ,, 376
211. Front Elevation of Keighley's Automatic Let-off and Take-up Motion. 378

Digitized by Google

FIG. PAGE
212. Positive Taking-up Motion 382
213. Front Elevation of Positive Taking-up Motion with inclined Shaft 387
214. Side Elevation of Positive Taking-up Motion with inclined Shaft 388
215. Front Elevation of Negative Taking-up Motion . . 389
216. End Elevation of Negative Taking-up Motion . . 390
217. Negative Taking-up Motion as applied to Silk Looms . 392
218. Front Elevation of Diggle's Negative Drop Box Motion . 395
219. End ,, ,, ,, ,, ,, . 396
220. Smith's Link-saving Motion for Diggle's Chain, Front Elevation 398
221. Smith's Link-saving Motion for Diggle's Chain, Plan . 399
222. Honegger's Drop Box Motion 401
223. Knowles's ,, ,, (sectional elevation) . . 403
224. Diagrams showing Movement of Boxes in Knowles's Motion 404
225. Wright Shaw's Positive Drop Box Motion, Front Elevation 406
226. Wright Shaw's Positive Drop Box Motion, Plan . . 407
227. ,, ,, ,, ,, Plan of Cylinder and Needles 408
228. Wright Shaw's Positive Drop Box Motion Link Economiser 408
229. Chain for Wright Shaw's Positive Drop Box Motion . 409
230. Chain Clip for Wright Shaw's Positive Drop Box Motion 410
231. Hacking's Positive Eccentric Drop Box Motion, Front Elevation 412
232. Hacking's Positive Eccentric Drop Box Motion, Back Elevation 413
233. Hacking's Positive Eccentric Drop Box Motion, showing Positions of Eccentrics 414
234. Cowburn and Peck's Positive Drop Box Motion, Front Elevation 417
235. Cowburn and Peck's Positive Drop Box Motion, End Elevation 418
236. Cowburn and Peck's Positive Drop Box Motion, Plan . 419
237. Chains for Cowburn and Peck's Positive Drop Box Motion 421
238. Chains for Cowburn and Peck's Positive Drop Box Motion 422

Digitized by Google

FIG.		PAGE
239.	Circular Box Motion, Front Elevation	424
240.	,, ,, End Elevation of Boxes	425
241.	Trough and Roller Temple, End Elevation and Plan	429
242.	Single ,, ,, Plan	430
243.	,, ,, ,, with Saw Teeth	431
244.	Swiss Inclined Ring Roller Temple	434
245.	Horizontal Ring Temple	436
246.	Shorrock and Taylor's Centre Selvage Motion, Front Elevation	439
247.	Shorrock and Taylor's Centre Selvage Motion, Side Elevation	439
248.	French Centre Selvage Motion, Front Elevation	441
249.	,, ,, ,, Side ,,	441
250.	Sir Titus Salt's Centre Selvage Motion	443
251.	Boat for weaving Plain Side Selvages, Front Elevation	446
252.	,, ,, ,, ,, Side ,,	446
253.	Lever and Mails for weaving Plain Side Selvages	447
254.	The Warp Line	450
255.	Elevation of Weaving Shed	458
256.	Plan of Weaving Shed	463

Digitized by Google

PART I

INTRODUCTION

THE POWER-LOOM

THE construction of a thoroughly automatic weaving machine has engaged the attention of loom-makers and others for more than a century, during which time much has been accomplished, but much still remains to be done. Many problems have been solved, many are still awaiting satisfactory solution. Of these some apparently remain where Dr. Cartwright and the inventors who immediately followed left them.

Various causes have been at work to retard the rapid development of the loom, foremost amongst which must be placed the nature of the material to be manipulated, its ever-varying weaving capabilities, and defective work that has passed without detection through the spinning or preparatory processes. These render the application of delicate and sensitive movements essential.

The want of higher training in mechanics has led inventors to add unmechanical and clumsy parts to the machine that, after a trial, had to be replaced by others. Then the comparative isolation of loom-makers from loom-

Digitized by Google

users has had the detrimental effect of placing many of the former at a disadvantage, owing to their lack of practical experience in the use of the loom, and the latter have been equally hampered by wanting the necessary mechanical skill to carry out any idea that daily contact with the work suggested. Nevertheless, the honour of adding parts that have stood the test of time must be equally shared by machinists on the one hand, and weavers, overlookers, mill managers, and manufacturers on the other.

The loom is a machine in which a series of intermittent movements are required to control its various parts; and, as is well known, intermittent mechanism is more difficult to arrange and keep in order than continuous mechanism, hence each part must be accurately timed and fixed to ensure a regular sequence of motions, or any want of unity will lead to disaster. Such being the case, one would naturally expect to find all who are interested in manufacturing constantly aiming to so unite the various parts that, unless breakage occurs, one will not be able to get out of harmony with another; and yet, after a century spent in developing the loom, its parts are frequently so imperfectly connected that, on reversing the motion of a slay, some continue to move in their normal direction, whilst others are reversed. This, to say the least of it, causes much annoyance and loss of time to the weaver.

Ordinary taking-up motions, dobbies, and Jacquard cylinders are the most familiar instances of this; but, generally speaking, the more elaborate the loom the nearer it approaches to a framing upon which seven or eight pieces of mechanism, each designed to do special work, are fitted, and more or less loosely connected. On such looms a weaver after unweaving has not infrequently to adjust the Jacquard cards, the picking-chain, the box-chain, and the

Digitized by Google

taking-up motion separately before again starting the loom.

There are, however, some notable exceptions where honest attempts have been made to control all the principal movements positively.

In the following pages each section of a loom is separately treated in detail with reference to construction of parts, the principles governing those parts, and the means adopted for connecting all to form a perfect machine.

They are divided into, *a*, primary mechanism—namely, shedding, picking, and beating up; *b*, parts added to assist or control the primary motions, as over and under reversing gear, fast and loose reeds, check straps, buffers, brakes, and shuttle guards; *c*, secondary motions, let off, take up, box, weft stops, temples, selvage, and others. After which the loom is considered as a whole, and the timing, setting, and relative positions of parts are dealt with.

PART II

HEALDS

Weaving consists in interlacing two sets of threads, one placed longitudinally and the other transversely in a fabric. The longitudinal or warp threads having been arranged and wound upon a beam, the question of separating them into two lines, and passing a transverse or weft thread through the opening made, must now be dealt with. It is by the proper selection of threads to form the upper and lower lines, as successive weft threads are inserted, that patterns are formed in fabrics.

Healds in one form or another have been employed for

Digitized by Google

many centuries to divide warp, because under certain conditions they supply the most perfect means of accomplishing this work, which is technically known as shedding. It is of importance to the student that he shall know how to employ them to produce the best results. Before this can be done, however, he should first become familiar with the different kinds of healds as well as the purposes they are intended to serve.

From the time healds were first introduced the principle of forming a shed was perfected, and it only remained for later inventors to improve upon the model and introduce new appliances for actuating them.

The most primitive heald of which we have any record was used by the Egyptians and Greeks. It exactly corresponded with the lower half of a modern one, and consisted of a series of twine loops, each passing round a warp thread and being fastened to a wooden rod. The number of loops on a rod, and the number of rods employed, depended upon the closeness of the warp threads and the order of interlacing them, but collectively they equalled the threads of warp required to produce a given fabric. A shed was formed by drawing forward the proper rod, and thus carrying one set of threads across the rest. Although the principle of shedding was perfected by this invention, the means adopted for controlling the rods—namely, the weaver's hands—rendered weaving a slow process; still it was vastly more expeditious than the previous method of threading a kind of needle through the warp in a manner analogous to darning.

Fig. 1 is a representation of the above-named heald; dot *a* is a cross-section of a warp thread, *b* the heald twine forming a loop, and *c* the wooden rod to which it is attached. When rod *c* is drawn forward, all warp threads

Digitized by Google

controlled by it will be carried in advance of those connected to other rods.

The next alteration is said to be of Indian origin, and more than two thousand years old. It was almost as great an improvement upon the Egyptian heald as the latter was upon older appliances. It consisted in linking a second and similar series of loops into those previously described, passing each round a separate rod, and making all secure to a band, known as the ridge band, the use of which was to keep each loop in its proper place upon the rods. By the introduction of this simple contrivance the productiveness of a loom was largely increased, for healds were actuated by the weaver's feet, and his hands left free to control other parts of the machine simultaneously instead of consecutively. The utility of this heald will be sufficiently demonstrated when it is stated that a large number are still used in different parts of the world, although they have been entirely superseded in our own country.

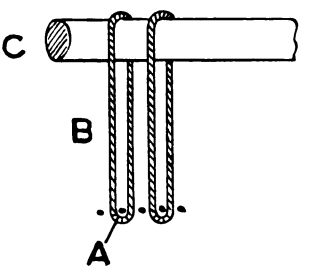

FIG. 1.

Fig. 2 shows the construction and arrangement of clasped healds; *a*, *b*, are two of a series of loops attached to rods *c*, *d*. Rod *c* is coupled by a cord *f* passing over a grooved pulley *g* to rod *c'*, containing a similar number of loops. The bottom rods *d*, *d'*, are connected by cords to treadles *h*, *h'*, and the warp threads *e* are drawn alternately through the eyes formed by linking two heald loops. When at work the weaver depresses first one and then the other treadle *h*, *h'*, with his feet. Assuming *h* is pressed down, shaft

Digitized by Google

c, *d*, together with the warp threads passed through its loops, will receive a similar motion; but shaft *c'*, *d'*, the warp controlled by it, and treadle *h'*, all move through an equal space in the opposite direction. When treadle *h'* is

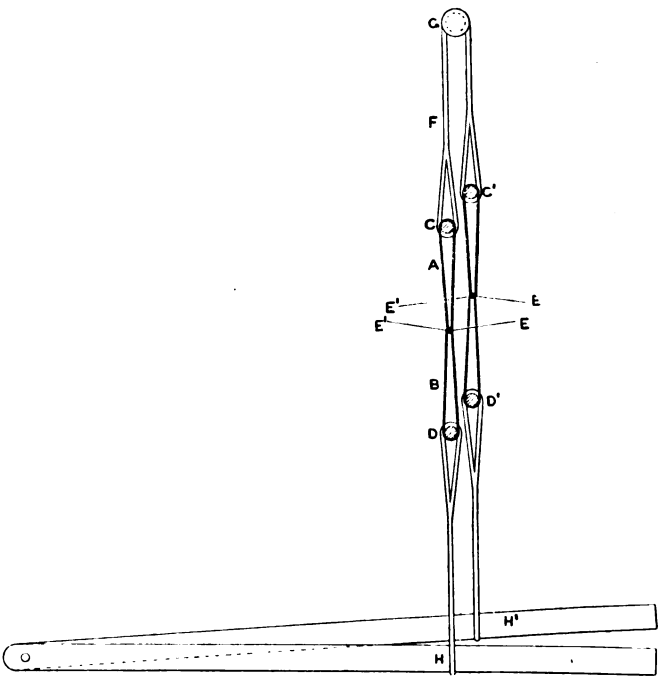

FIG. 2.

forced down the position of every part is reversed, consequently the warp threads can be elevated and depressed as required in a very expeditious manner; but, on the other hand, great and unnecessary strain is put upon the warp when a shed is open, owing to the nipping tendency

Digitized by Google

of the heald loops, which prevents the warp from making the slightest sliding movement.

If reference is made to Fig. 2, it will be noticed that healds are placed at right angles to the warp with one rod above and the other below it; also that each shaft is so arranged as to ensure a vertical rise or fall. If it is assumed that all warp threads are horizontal when the healds are not acting, any movement of the latter will bend the former, and so increase their length between points *e*, *e'*. In order to avoid straining the threads they should be free to slide through heald eyes when an upward or downward motion is required. With clasped healds this cannot well be done, for when force is exerted to move a shaft, the loops bear tightly upon the thread between them, and so prevent any tendency to slide, consequently any difference that may exist between the length of a straight and a bent thread must be due to the elasticity of the material being woven. In cases where weak or inelastic warps are used excessive breakage is likely to result.

To us it certainly appears strange that the simple remedy eventually adopted escaped the notice of so many generations of skilled workmen.

The modern indispensable heald has been rendered almost perfect by the device of forming an eye in the upper loop by tying a knot at a short distance above the point where it links with the lower half, thus leaving room for a thread of warp to pass through, and move freely without being strained. Thin laths have also long ago displaced round rods, which was mainly done to allow a larger number to be placed side by side in a given space than was possible with the rods.

The following amongst other materials have been used to make heald twine:—Worsted, linen, silk, and cotton; but

Digitized by Google

cotton and worsted are now chiefly employed. Down to a comparatively recent period worsted was the principal twine used in the manufacture of healds for the cotton and silk industries, but cotton healds have entirely supplanted worsted in the former, and to a large extent in the latter trades.

Good cotton healds are cheaper, will work as well and last longer than worsted for all but exceptional purposes; this is largely due to the skill and care that have been bestowed upon sizing and varnishing cotton twines. Considering that the best of healds are faulty, it may be well to define the meaning of the word "good," as applied to them.

If a heald could be obtained that was eminently flexible, perfectly smooth, capable of resisting a large amount of friction and strain, and readily adjustable to any reed or pattern, it might be fairly claimed that this branch of manufacture had been perfected.

Heald-making is now carried on as a special branch of the cotton industry by firms who work for manufacturers generally; it has been improved to a surprising extent during the latter half of the present century, principally by the introduction of beautiful and elaborate automatic knitting machinery, together with better methods of sizing, varnishing, and drying; but as this branch is outside the scope of the present work, a description of the machinery and processes requisite for its successful accomplishment will not be attempted. Something may nevertheless be said upon one or two important points relating to heald manufacture.

Sizing and varnishing are quite as important as knitting; for defective work at this stage produces detrimental effects in the loom, some of which may be mentioned as swollen

Digitized by Google

and twisted twine, eyes closed or sideways to the warp instead of being open and facing it, roughness, lumps of size and varnish left in the eyes, extreme rigidity, stickiness, and lack of lasting powers.

Heald twine must vary in thickness to suit the fineness and closeness of the warp threads it has to actuate; for it is obvious that twine suitable for a fabric containing few threads per inch would be crowded upon the shafts if a large increase was made, and as a result more friction would be put upon the warp. Again, twine strong enough to control fine warp would be unable to sustain the heavy pressure put upon coarse warps.

A rule that would enable a manufacturer to select heald twine with something approaching to mathematical accuracy is much to be desired, but unfortunately no such rule is available, chiefly owing to a lack of definite information respecting the effect that spinning and doubling twist has upon reducing the diameter of a thread, and that of sizing and varnishing upon increasing it. Several attempts have been made to proportion heald twine, but from various causes they have been rejected, and the matter is still left to the experience of the mill manager or of the knitter.

The following table of yarns suitable for different reeds will serve as a guide to the selection of counts; but it must be remembered that although the higher numbers for any reed will make the strongest healds, they are the most costly:—

Digitized by Google

Reed, viz. number of dents on 2″.		Suitable Counts from which a Selection can be made.				
30	36	20/40	24/50	28/60	...	...
36	44	18/40	20/50	24/60	...	...
44	54	15/40	18/50	21/60	...	...
54	60	12/40	15/50	18/60	...	...
60	66	12/40	12/50	15/60	...	...
66	72	...	9/50	12/60	16/70	...
72	80	...	...	9/60	12/70	...
80	100	...	...	...	9/70	12/80

A few years ago healds were introduced in which metallic clips were employed to form eyes on twine healds, but they did not meet with much favour; experience tended to prove them to be more costly without being more durable than ordinary healds.

Other healds are made entirely of twisted wire, a small loop being left in the centre for the warp to pass through, and a longer one at each end for the reception of shafts, upon which they are loosely placed.

It is claimed for wire healds that they possess the following advantages over other makes:—They last longer, are perfectly smooth, and suitable for any fabric no matter how many warp threads are required on a given space. Being loose upon the shafts, they are equally adapted for a regular or an irregular draft; it is simply a question of sliding a few healds on or off a shaft to obtain the required number, and each heald will readily move into its appointed position by the pull of the warp. Whereas with ordinary knitted healds each one has a fixed position, and a change of fabric implies a change of healds.

If a wire heald breaks, there is a tendency to cut contiguous warp threads, and a difficulty is ex-

Digitized by Google

perienced in passing the hand between them when repairing broken warp; this is owing to the greater rigidity of wire as compared with twine. A given number of wire shafts will also occupy more space in the loom.

Fig. 3 shows the form of a modern-eyed heald; *b*, *b'*, are the loops varying from 10″ to 13″ from band to band;

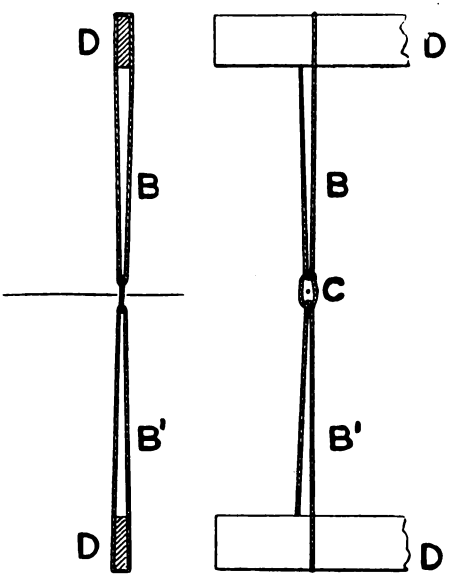

Fig. 3.

c, the eye formed for the warp thread to pass through, $\frac{1}{4}$″ deep for cotton, to $\frac{5}{8}$″ for silk; *d*, the laths or shafts.

Eyed healds are used in many forms; twine loops frequently support a metal eye made of steel, brass, glass, or other metal. Such healds are often employed when rough, knotty warps have to be woven, but glass is principally used for fine silks and cotton gauzes. They

Digitized by Google

all offer less resistance to the passage of warp than twine eyes, and wear better; but generally speaking they take up more room.

Healds must not only correspond with the order in which warp is drawn through them, but also with the reed to be used. See Part XVI.

For example, if a reed contains 100 warp threads per inch, then one lineal inch, taken across all the shafts in a set, must contain 100 healds; but it is evident they may be equally or unequally placed upon the shafts, therefore it will be necessary to consider their distribution also.

The following rule will give the number of healds required for any shaft:—

$$\frac{\text{Dents per inch in reed} \times \text{inches of reed filled}}{\text{dents filled by one pattern}} =$$

the number of patterns required, ∴ the number of threads per pattern on the shaft for which the calculation is made, multiplied by the number of patterns required, equals the total of healds for that shaft.

A reference to Fig. 4, which is a draft or plan of drawing the warp through the healds, will render the meaning of the preceding rule clear. Each horizontal line represents a heald shaft; each thin vertical line a warp thread; an arrow-head marks the position of a heald eye; and the spaces between the thick vertical lines represent the scheme of reeding, or passing the warp between the dents of the reed.

In order to find how many threads are used to one repeat of any pattern, the position of every thread in a draft must be observed, and a point found where a certain arrangement occurs again, and whenever consecutive

Digitized by Google

threads from each point occupy similar positions, the repeat is obtained by counting from point to point.

In Fig. 4 four threads complete the pattern, because 1 and 5, 2 and 6, 3 and 7, 4 and 8, respectively occupy similar positions. In Figs. 5, 6, 7, and 8 the drafts are complete on 6, 18, 16, and 40 threads respectively.

The following examples are practical applications of the preceding rule. If a reed contains 30 dents per inch, and is to be filled for 24 inches, irrespective of selvage

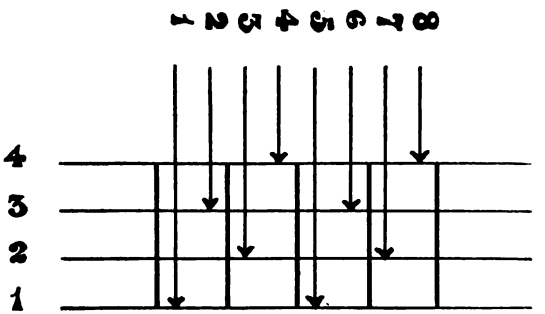

Fig. 4.

threads, with warp drawn as in Fig. 4, $\frac{30 \times 24}{2} = 360$ repeats of pattern knitted on 24 inches of each shaft; 360 patterns × 1 thread to a pattern equals healds per shaft = 360.

In Fig. 5 six threads equal one repeat, and they occupy 3 dents in the reed, $\therefore \frac{30 \times 24}{3} = 240$ repeats. Shafts 1 and 4 have each one thread to a pattern, but shafts 2 and 3 have each two threads to a pattern.

$240 \times 1 = 240$ healds on shafts 1 and 4.
$240 \times 2 = 480$ healds on shafts 2 and 3.

Digitized by Google

In Fig. 6 the warp threads are arranged in groups upon two sets of shafts; blank spaces on one set come

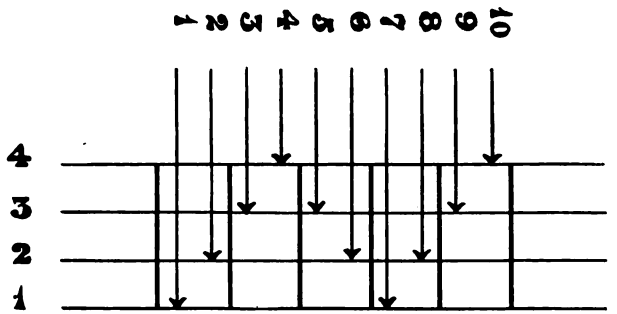

FIG. 5.

opposite to healds on the other; in all such cases it is desirable to obtain the rate and order of knitting in addition to the healds on a shaft.

Assume the same reed to be used but to have three

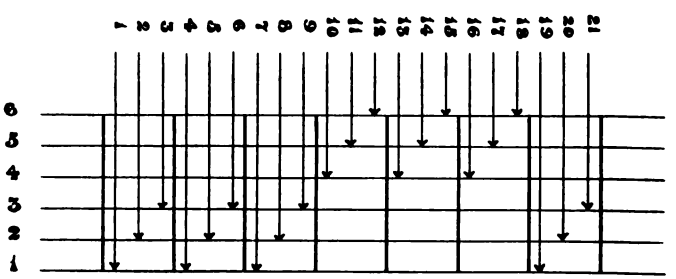

FIG. 6.

threads to each dent, then $\frac{30 \times 24}{6} = 120$ repeats, and as there are three threads to one repeat $120 \times 3 = 360$ healds per shaft.

Digitized by Google

The *rate* of knitting can be obtained in the following manner:—One dent of this reed equals $\frac{1}{30}$ of an inch, and 6 dents are used for each pattern, therefore one pattern $= \frac{6}{30}$ of an inch; but as each shaft requires 3 healds knitting, and a space leaving equal to 3 more, it follows

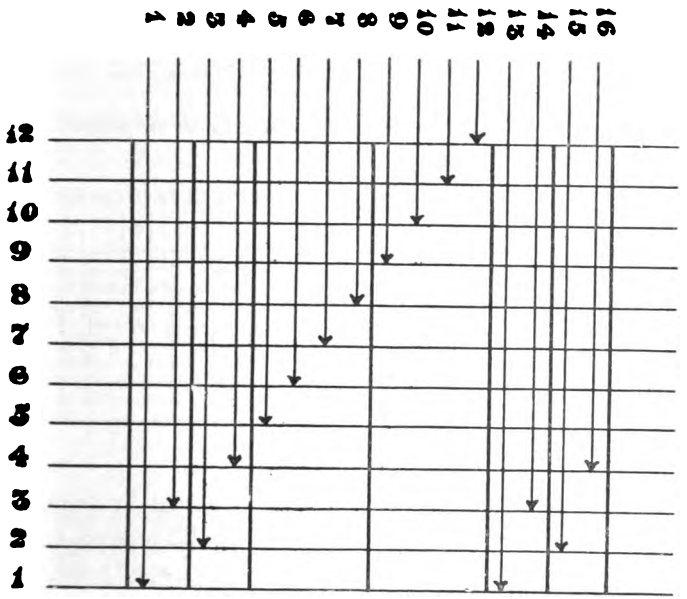

FIG. 7.

that 3 healds must only occupy $\frac{3}{30}$ of an inch, $\therefore$ 1 heald $= \frac{1}{30}$ of an inch, and 30 is the rate of knitting.

The *order* is obtained from the draft thus—3 knitted, 3 missed, for shafts 1, 2, and 3; and for shafts 4, 5, and 6 it will be 3 missed, 3 knitted.

Some drafts are broken to such an extent that separate calculations must be made for several shafts; this is due

Digitized by Google

to irregularities in drafting, in passing the threads through the reed, or from both causes combined, as the following examples will demonstrate :—

In Fig. 7 the threads from shafts 1, 2, 3, and 4 are shown reeded two in a dent, and those from shafts 5 to 12 are four in a dent, $\frac{30 \times 24}{6} = 120$ repeats. Shafts 5 to 12 have each one thread to a pattern, $\therefore\ 120 \times 1 = 120$ healds per shaft.

Shafts 1 to 4 have each two threads to a pattern— $120 \times 2 = 240$.

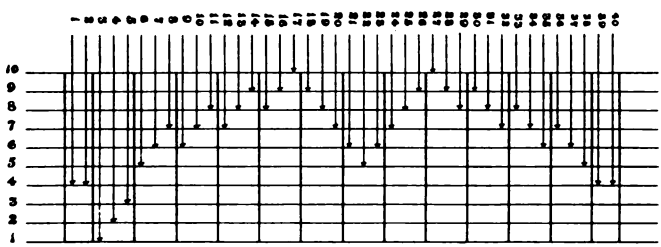

FIG. 8.

The accuracy of a calculation can be tested by finding the number of warp threads required to fill the reed, and comparing it with the number of healds in a set; unless both correspond, an error has been made, for every thread must have a separate eye, thus 16 warp threads per pattern $\times$ 120 patterns = 1920 warp threads.

Shafts 5 to 12	each with	120 healds	= 960
„ 1 to 4	„	240 „	= 960
		Total	1920

thus proving the preceding calculation to be correct.

In the last example (Fig. 8), the draft in healds and

Digitized by Google

reed are both irregular; it will be noticed that the threads from shaft 4 are reeded two in a dent, and those from the remaining shafts three in a dent.

$$\frac{30 \times 24}{14} \text{ dents per pattern} = 51\tfrac{3}{7} \text{ patterns,}$$

$\frac{3}{7}$ of 14 dents = 6 dents; these may be filled with selvage threads, and 51 patterns used.

Shafts	1, 2, 3	each	has 1 thread	to a pattern	= 51 × 1 = 51	healds.
Shaft	4,	„	4 threads	„	= 51 × 4 = 204	„
„	5	„	3 „	„	= 51 × 3 = 153	„
Shafts	6, 9	„	6 „	„	= 51 × 6 = 306	„
„	7, 8	„	8 „	„	= 51 × 8 = 408	„
Shaft	10	„	2 „	„	= 51 × 2 = 102	„

51 × 3 = 153
204
153
306 × 2 = 612
408 × 2 = 816
102

Total 2040 healds.

Proof.—Forty threads per pattern × 51 patterns = 2040 warp threads.

In all cases provision must be made for selvage threads, either by knitting extra healds upon the shafts used for the body, or by adding separate shafts. As a rule separate shafts are only employed when the selvage pattern differs from the body pattern.

One point still requires elucidation—namely, *heald-setting*, which is resorted to when a set of healds, knitted for a fine reed, is used with a coarse one. In such an event some healds must be left empty; but they should be equally distributed along the entire shafts.

Digitized by Google

The order of setting can be obtained by the aid of the following formula :—

$$\frac{\text{Reed to be used}}{\text{Reed for which healds are knitted—reed to be used.}}$$

Example.—Let it be assumed that healds suitable for a reed with 39 dents per inch are to be used with a reed containing only 26 dents per inch, then

$$\frac{26}{39-26} = \frac{2}{1},$$

or two full drafts of the healds to one empty draft all across.

One other example will suffice to render this perfectly clear, for it is really a simple matter. If healds suitable for a reed with 38 dents per inch are used with a reed containing 32 dents per inch,

$$\frac{32}{38-32} = \frac{16}{3},$$

or 16 drafts filled to 3 missed.

Probably the best result will be obtained if the warp is drawn as follows—

	5	repeats of full draft filled and		1	missed
	5	„	„	1	„
	6	„	„	1	„
Total	16	filled		3	missed.

PART III

SHEDDING OR DIVIDING THE WARP

Two principles are involved in shedding which are respectively known as "closed" and "open." In the former,

Digitized by Google

the mechanism employed places all warp threads level after the insertion of each pick of weft, irrespective of the positions they are to occupy for the following pick.

Two methods are in general use of controlling warp to produce closed shedding; first, by giving motion only to those threads that are to form the upper line. Under this condition the level position of the warp is also the bottom line; hence, in order to form a top shed, it is necessary to move some of the warp through a space equal to twice the depth of shed required, once up and once down, before a fresh selection can be made. A shed of this kind is said to have a stationary bottom with a rising and falling top. See Fig. 9, where *a* represents the bottom line of warp,

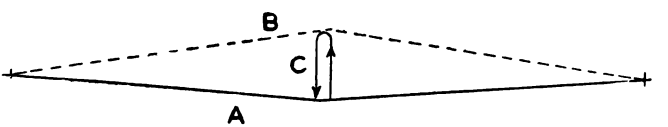

FIG. 9.

b the rising and falling line, and *c* an arrow showing the space passed through. If the foregoing principle is compared with others in use its relative defects may be summarised as follows:—1st, compared with any other method it takes about twice the time to make a change, and manifestly is not suitable for high speeds; 2nd, it puts great and unequal strain upon warp by moving it through an excessive space; and 3rd, it consumes more power than most of the others, because the compensating principle is absent—namely, that of making a falling thread help to lift a rising one.

A few tappets, all single-lift dobbies and Jacquard machines act in the above manner.

The second method of forming a closed shed consists in

Digitized by Google

imparting an upward movement to that portion of the warp which is to form the top line, and an equal downward movement to those threads that form the bottom line, then, after the insertion of a pick, the top line is lowered, and the bottom line is raised to the centre; therefore the warp line when level is half-way between the highest and lowest points of an open shed. Fig. 10 represents a centre shed; *a* is the closed warp line, *b* and *c* are respectively the upper and lower lines of an open shed, *d* and *e* are arrows which show the movement of a thread to equal the depth of shed—namely, half the distance in an upward and half in a downward direction.

Compared with the foregoing it will be found superior

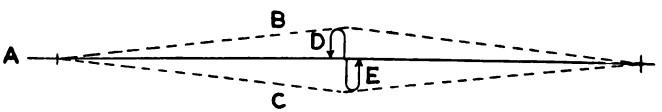

FIG. 10.

in several respects: 1st, although considerable strain is put upon the warp by giving motion to every thread between the insertion of successive picks, it does not equal that of a stationary bottom shed; 2nd, the time occupied in opening a centre shed is only half that of the former, for the distance travelled by the two warps is as 1 : 2; 3rd, a rising thread is to a certain extent balanced by a falling one; but, on the other hand, a very unsteady movement is caused by the warp being in constant motion. In this respect it is inferior to the stationary bottom plan.

Woodcroft, oscillating, and a few other tappets, together with all centre shed dobbies and Jacquards, give this kind of shed; but the system has not many advocates to-day; it is exceptional to find an ordinary tappet constructed to

Digitized by Google

produce it, and even such a tappet as the Woodcroft is now made to form an open shed. Leaving out of consideration for the present those fabrics that are best produced by closed shedding, it may be affirmed generally that open shedding is coming into more extensive use year by year, and is best adapted for the work to be done.

In open shedding the bulk of the warp constantly forms two stationary lines, and changes are made by carrying the threads from one fixed line to the other; so, as the ascending and descending threads move simultaneously, a shed is formed in the minimum of time with comparatively little strain upon the warp, there being no unnecessary movement given to it.

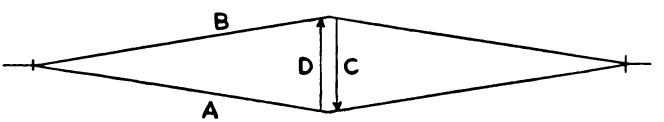

FIG. 11.

In Fig. 11 *a* and *b* are the stationary lines of warp, *c* and *d* are arrows showing the movement of falling and rising warp to equal the distance between *a* and *b*. It is also to be observed that a saving in power is effected by falling threads helping to lift rising ones.

The method has, however. one defect, which becomes troublesome to a weaver in proportion to the number of shafts in use; it is caused by the two fixed shed lines which render it a far more difficult matter to repair broken threads than is the case with closed shedding where all the warp forms a single line.

Some simple and effective levelling apparatus should be added to all open shed looms to allow the heald eyes to be brought level instantly repairs become necessary, and also

Digitized by Google

to enable the weaver to replace them in their original positions before again setting the loom in motion.

Open shedding is obtained by the use of ordinary tappets, the Knowles motion, some dobbies, and a few Jacquards.

Many of our best-known shedding motions cannot be classified either as open or closed, but are compounded of both principles. The stationary bottom line of the former is retained, but threads from the top line of a semi-open shed either pass to the bottom at one movement, or are arrested midway and again carried to the top.

Such a shed can be formed as expeditiously as an open one, for the upward movement begins and ends with the

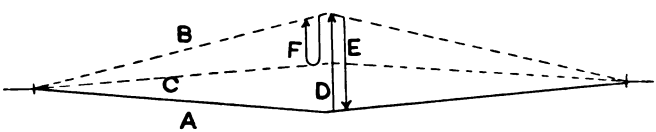

FIG. 12.

downward through movement, and the arrested downward movement is converted into an upward one at the instant threads from the bottom line are in the same plane as those of the former; they all reach the top at the same time, but the strain upon them is not so equally distributed as in a true open shed.

Double-lift Jacquards and certain dobbies form sheds of the foregoing description.

In Fig. 12 *a* is the stationary bottom, *b* the top line, *c* the point where downward movement is stopped in all threads that are to form part of the top line for the succeeding pick, *d* and *e* are arrows showing the movement of through threads, and *f* that of threads which are to lift for the following pick.

Digitized by Google

On p. 4 it is stated that healds, under certain conditions, are capable of giving the most perfect form of shedding. It now remains to consider what those conditions are, and in what respects healds fail to meet general requirements.

Healds can only be employed when a large number of warp threads constantly move up and down in the same order. This will be clearly understood by a reference to any of the heald calculations, pp. 13-17, where the number on a shaft shows how many threads must move in concert whenever that shaft is moved.

If the number on each is reduced without reducing the warp threads, the number of shafts required to govern the entire warp must be increased in proportion, but a point is soon reached, beyond which it is impossible to go, owing to the great space occupied between the front and back shafts when in the loom.

In the cotton trade this limit is reached at from 20 to 24 shafts, but in the worsted trade 36, or even more, are employed, hence when healds are used not more than 24 warp threads can be moved in any separate order, no matter how many threads the warp may contain; and here we find the weak point of healds for general work; they are only suitable for the production of patterns which are of a more or less set character, in which curved lines are either absent or only present to a limited extent. Where flowing lines and elaborate geometrical or floral effects are required a Jacquard machine must be employed.

Healds are placed at right angles to the warp threads, and must be so connected to the shedding motion that a vertical pull will be exerted upon them, for a lateral movement, however slight, is detrimental to good weaving. They must also be moved at a varying velocity to corre-

Digitized by Google

spond, as far as possible, with the tension upon the warp. Although this latter is not equal in all systems of shedding, still strain rapidly increases as the warp approaches the upper and lower lines, so to reduce it as much as possible healds should move slower as the work to be done increases.

The parts generally used for heald shedding are known as tappets, barrel motions, and dobbies. The two former are, as a rule, best adapted for the production of short patterns, or those having a few picks of weft to a repeat, because only a limited number of these motions can be advantageously used with patterns of more than 16 picks to a repeat.

Dobbies are practically unlimited in respect to length of pattern, and they are also frequently employed when more than 8 shafts have to be used, and generally for more than 12. Still it must be remembered that if a tappet or barrel motion can be conveniently employed the best results are obtained, for they are the simplest of all shedding motions; they are steady, certain in action, and capable of lifting a heavy weight with less wear and tear than other appliances. If properly constructed, they can be made to move healds at any speed, and leave them stationary for any length of time to suit the requirements of the fabric. No shedding motion will put less strain upon the warp, consume less power, give a greater output, or cause fewer defects in a finished fabric. These are all-important considerations to a manufacturer and tell greatly in their favour.

TAPPETS

"Tappet, cam, and wiper are names given indiscriminately to those irregular pieces of mechanism, to which a

Digitized by Google

rotary motion is given for the purpose of producing, by sliding contact, reciprocating motions in rods and levers. When the rod is to receive a series of lifts, with intervals of rest, the piece is generally called a tappet; but if motion is continuous, the terms cams or wipers are used."

Tappets are made in great variety, and are fixed on different parts of the loom—namely, under and over the shaft centres; under, but near one end of the shafts; and outside the end framing. Position is, however, mainly a question of convenience, although the leading ideas which govern it are economy of floor space, handiness of parts, and the best manner of performing the work to be done. When more than 5 shafts are to be used, tappets are generally placed at one end of a loom.

They act in different ways; those that are simplest in construction have merely a rotary motion, but some elaborate tappets have a compound movement, partly rotary, partly oscillating. Tappets differ also in principle—some are negative, others are positive. A negative one is only capable of acting on the healds so as either to pull them down, or to lift them; and in all such motions additional mechanism must be added to impart the opposite movement, but a positive tappet controls the healds in both directions without the aid of secondary appliances.

Figs. 13, 14, 18, 26, and 27 show the tappets with their requisite connections in each of the positions above named.

In Fig. 13 *a*, *a'* are two plates of an ordinary negative tappet, both are fixed on the tappet shaft exactly in the centre of healds *c*, *c'*; *d*, *d'* are two treadles that move on fulcrum pin *e*, each treadle carries an antifriction roller at *f*, *f'*, upon which the plates act as they rotate; *g*, *g'* are straps and cords passing from treadles *d*, *d'* to heald shafts *c*, *c'*; *h*, *h'* are cords and straps connected to the upper

Digitized by Google

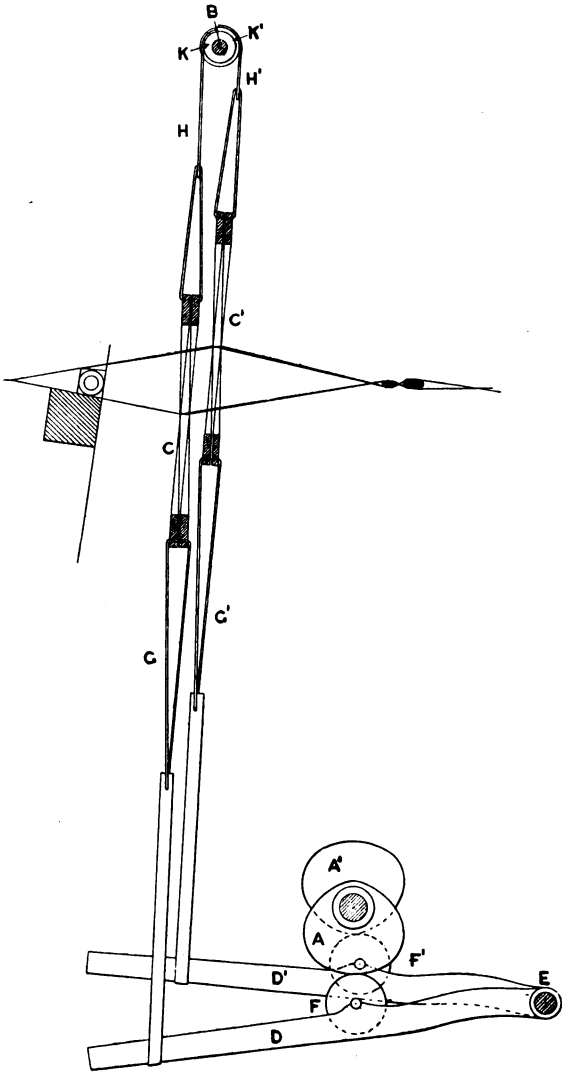

FIG. 13.

Digitized by Google

shafts, and screwed respectively to the peripheries of rollers k, k' set-screwed to a shaft b, working freely in bearings as shown. When tappets are in motion the treadles are alternately depressed, and the under connections impart a similar downward movement to the healds; but it will be observed that a tappet has no power to lift either treadles or healds, the latter motion being due entirely to the upper connections and pulleys. Thus, as one heald shaft is depressed by a treadle, strap is unwound from roller k and wound upon roller k', or *vice versâ;* therefore a sinking heald is made to lift a rising one, and the negative action of a tappet is converted into a positive one by the application of rollers and straps.

If tappets are placed above healds their positive action is to elevate the shafts, and rollers, springs, or weights are fixed below to reverse the direction of motion (see Fig. 27).

Various defects are more or less common to tappet-shedding, the most frequent are over-shedding, or making the separation too wide; this strains and breaks warp. Under-shedding is the result of insufficient space being provided for the shuttle to pass through, so it moves over threads it should move under, breaks the warp, and requires a stronger pick. Unequal shedding is caused by elevating one end of a shaft more than another, also by not regulating the movement of each shaft to raise or sink all warp to one level where the shuttle enters it. If shedding is mistimed, the warp is opened or closed without due regard to the slay's motion, selvages will be bad, threads broken, and the shuttle will pass over instead of under them. If the dwell or pause of a tappet is unsuited to the fabric, the last-named defects will also be caused, and when a tappet is faulty in form, the shape of its working face imparts a harsh movement to healds. All culminate in

Digitized by Google

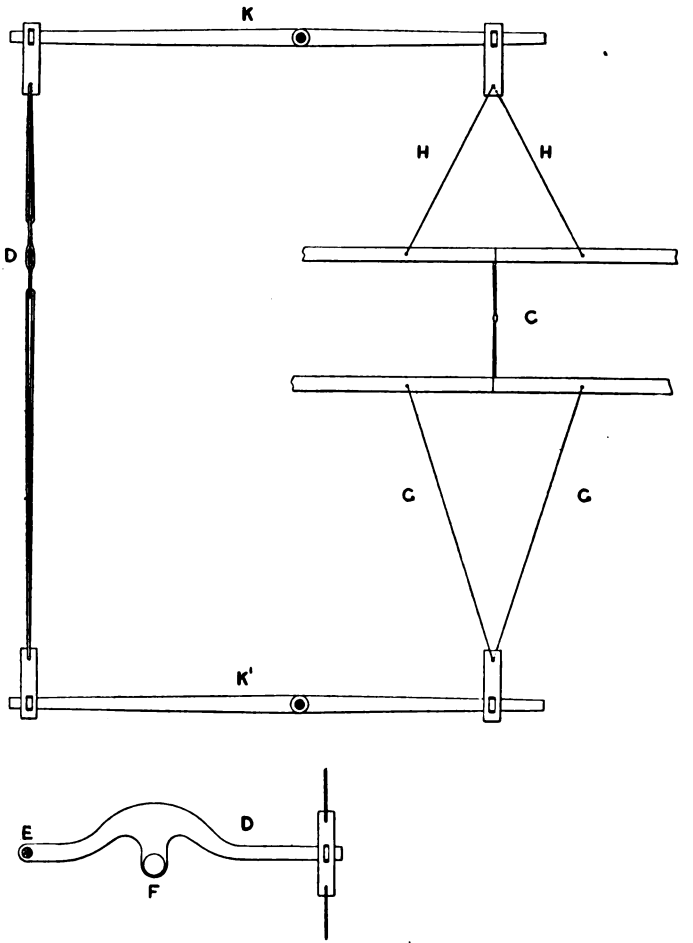

FIG. 14.

Digitized by Google

unnecessary strain and breakage of warp, but most of them can be avoided by a little care on the overlooker's part.

As the quality and quantity of work produced by a loom are influenced to a considerable extent by the form of tappet employed, it should be a first consideration to construct it in such a way that the greatest length and best quality of cloth will be obtained in a given time.

Before commencing to design a tappet, several things must be carefully considered in the following order :—

1. The pattern to be produced in the fabric—*a*, the number of picks of weft to one repeat of the pattern; *b*, the order of lifting and depressing healds.
2. The size of tappet—*a*, the space through which healds must move to give room for a shuttle to pass through a shed; *b*, the difference between the thin and thick parts of tappet to impart that movement to healds; *c*, the distance from centre to thin part of tappet.
3. The nature of the movement to be imparted to healds.
4. The time during which healds are to remain stationary.
5. The diameter of the antifriction roller or treadle bowl.

A plan showing how the healds must rise and fall for one repeat of a pattern is given to the tappet-maker. This is known as the tie-up or lifting plan; the marks upon it can be taken to represent either rising or sinking healds, but it is usual to state which is intended.

Figs. 15 and 16 show different ways of making a

Digitized by Google

tie-up; in the first, each vertical line represents a tappet treadle, and each horizontal line a heald shaft.

Reading up a vertical line, the crosses at the points of intersection show which healds are to be moved for one pick; and in reading across a horizontal line, the order of lifting one shaft for a repeat of the pattern is obtained. As one tappet plate acts only on one shaft, horizontal readings must be taken when designing a tappet, and the number of vertical lines gives the number of picks to a repeat.

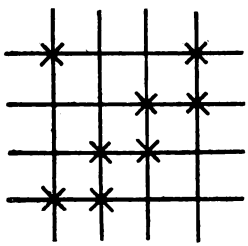

FIG. 15.

The only difference between the first and second figures is that, in the latter, the *spaces between* the vertical and horizontal lines respectively represent treadles and shafts instead of the lines themselves.

The first of the five points named is thus seen to be a simple matter—namely, that of obtaining the order of lifting healds, and the number of picks to a repeat.

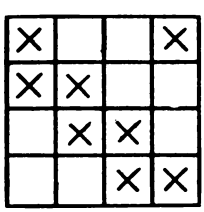

FIG. 16.

The next point requires a little more attention. It is necessary to ascertain the depth of shuttle to be used when measured along its front edge; its distance from the last pick of weft forced into position in the fabric at the time it enters the shed; the distance from last pick of weft to heald shaft; the arrangement of levers, and the position of treadle bowl upon the tappet treadle (see Fig. 17), where all the above-named parts are shown in their working positions. Assume *a*, the shuttle, to be $1\frac{1}{8}''$ deep; *b*, fell of cloth to front of shuttle, $3\frac{3}{8}''$; *c*, fell of cloth

Digitized by Google

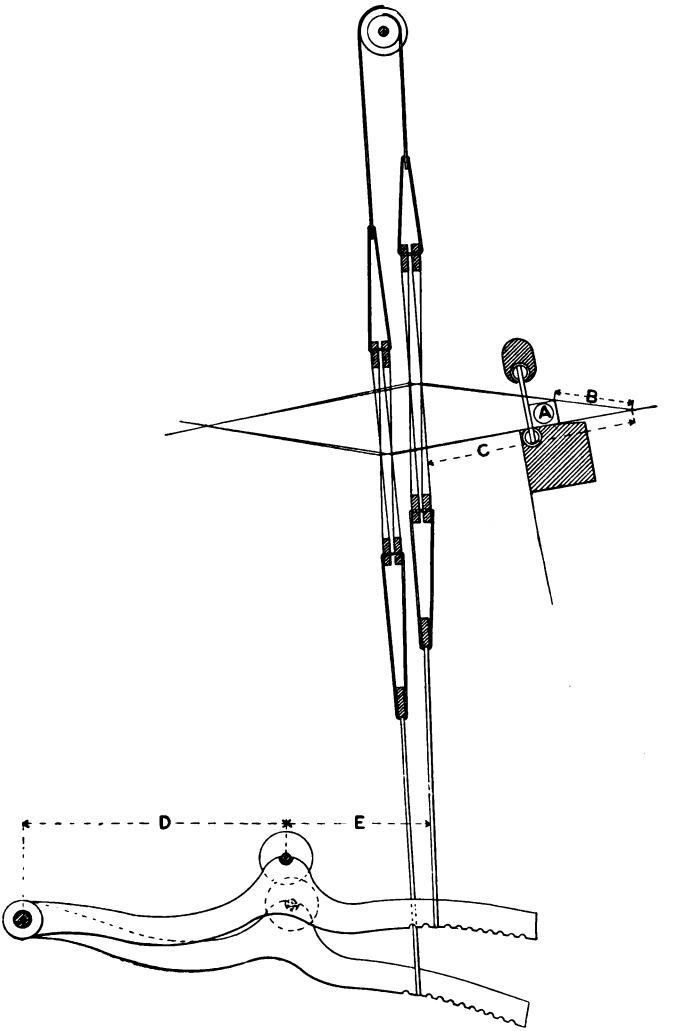

FIG. 17.

Digitized by Google

to front heald shaft, 10″; *d*, treadle fulcrum to centre of bowl, 11¼″; *e*, point of connection with healds to treadle fulcrum, 19¼″. Then 3·375 : 10 : : 1·125 : 3·33″ the lift of heald; and 19·25 : 11·25 : : 3·33 : 1·94″ which equals the lift of tappet.

When a tappet is placed at the end of a loom, additional levers are required, as seen in Figs. 14, 18, and 19.

Fig. 18, *a*, is a shuttle 1⅛″ deep at front; *b*, fell to front of shuttle when it enters the shed, 2¾″; *c*, fell to heald shaft, 8½″; *d*, top lever fulcrum to heald strap, 5¾″; *e*, top lever fulcrum to treadle connection, 6½″; *f*, treadle fulcrum to centre of bowl, 22½″; *g*, treadle fulcrum to connection with top lever, 30″, ∴ 2·75 : 8·5 : : 1·125 : 3·477″ = lift of heald; and 5·75 : 6·5 : : 3·477 : 3·93″ = fall of top lever at treadle connection; also 30 : 22·5 : : 3·93 : 2·947″ = the lift of tappet required.

Fig. 19 is an arrangement for positive shedding, but the method of obtaining the lift of tappet is precisely similar to the last: *a* is the shuttle 1¼″ deep at front; *b*, fell to front of shuttle, 4″; *c*, fell to heald shaft, 8″; *d*, top lever fulcrum to heald strap, 19″; *e*, top lever fulcrum to treadle connection, 20½″; *f*, treadle fulcrum to centre of bowl, 11″; *g*, treadle fulcrum to connection with top lever, 26″; *h*, bottom levers, which correspond with top ones, therefore movement of heald shaft up and down is equal.

To find tappet lift—

4 : 8 : : 1·25 : 2·5″ = lift of heald.

19 : 20·5 : : 2·5 : 2·7″ = fall of top lever at the point where it is connected with the tappet treadle.

26 : 11 : : 2·7 : 1·1″ = lift of tappet.

It is desirable that a shed shall be as small as the nature of the work to be done will allow, in order to prevent unnecessary breakage of warp. This matter does not

Digitized by Google

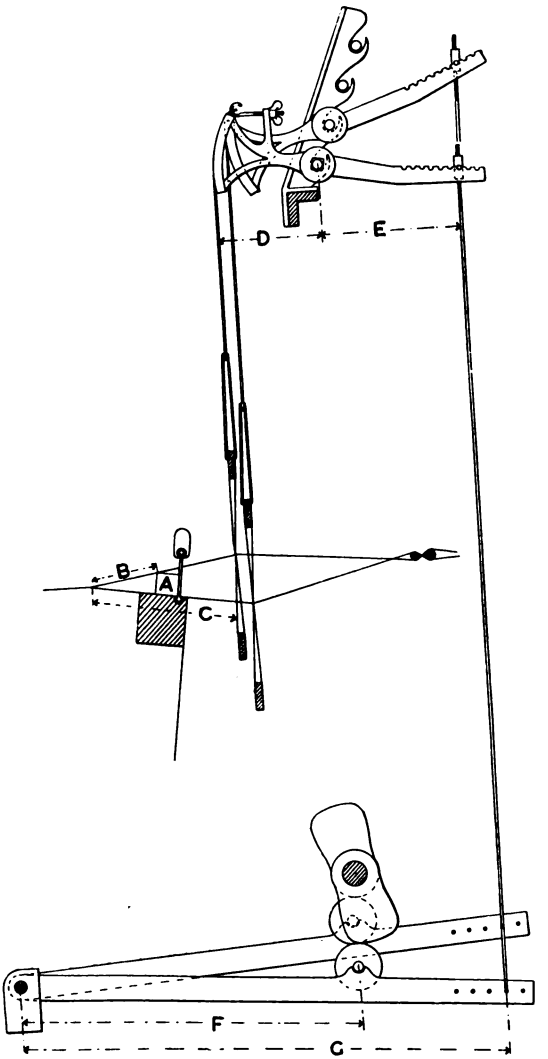

FIG. 18.

Digitized by Google

receive from overlookers and managers the attention it deserves, probably because they fail to realise that strain increases as the square of the space passed through. If, for example, from a closed shed warp is lifted 2″, the strain is represented by 4, but if lifted 3″ or 4″, the relative strains

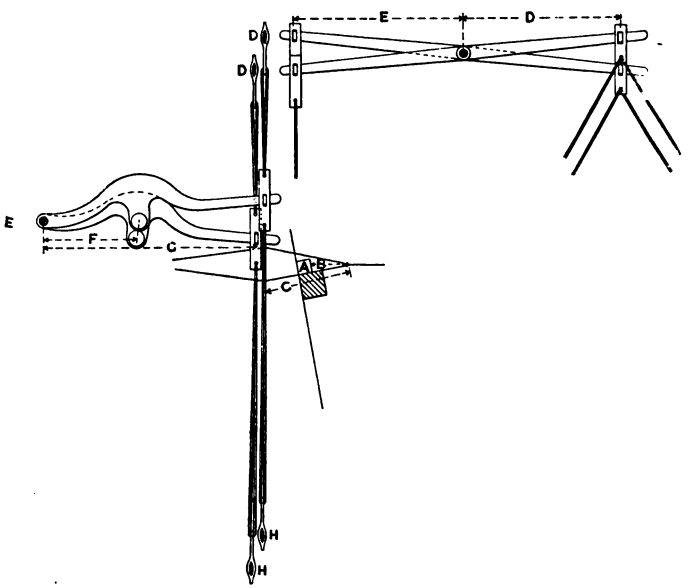

FIG. 19.

are as 9 and 16 respectively, hence doubling the size of a shed increases the strain fourfold. If two looms are assumed to be similar in construction, and are making similar fabrics, one running at 180, the other 200 picks per minute, the former having a shed 4″, and the latter one of 3″ in depth, the time for forming a shed being in both looms $\frac{2}{3}$ of a pick, the strain of one will be to that of the other as

Digitized by Google

$\frac{1}{180} - \frac{1}{3}$ of $\frac{1}{180} = \frac{1}{240}$ part of a minute,
$\frac{1}{200} - \frac{1}{3}$ of $\frac{1}{200} = \frac{1}{266 \cdot 6}$ part of a minute,

available for moving a heald.

$3^2 = 9$ units of work performed in the $\frac{1}{266 \cdot 6}$ part of a minute.
$4^2 = 16$ „ „ „ $\frac{1}{240}$ „ „

Or relative strain per second

$$\frac{3 \times 3 \times 266 \cdot 6}{60} = 39 \cdot 99.$$

$$\frac{4 \times 4 \times 240}{60} = 64. \qquad 39 \cdot 99 : 64 :: 1 : 1 \cdot 6.$$

The following simple practical test may be of use in demonstrating the above. Assume the distance from fell of cloth *a* (Fig. 20) to back rest *b* to equal 35″, and from fell to healds *c*, 10″; let the edge of an ordinary table top represent back rest *b*. Take a piece of twine, say 1½ yards long, tie a weight to one end, allow it to hang over at point *b*; fasten the other end by a drawing pin at point *a*, 35″ from *b*; mark the twine at *b*; place a rule vertical at *c*, which is 10″ from *a*, and lift the twine 2″ at *c*; make a second mark upon the twine at *b*, then continue to lift it at *c* to the fourth inch on the rule; and make a third mark upon the twine at *b*. Measure the spaces between the first and second, and second and third marks, and it will be found that the second space is four times as wide as the first. In weaving, warp is pulled from the beam in the same proportion.

All mention of vibrating bars has been omitted, because the assumption was that both looms were similarly constructed, and therefore the bars would act in precisely the same manner.

The distance between centre of shaft and thin part of

Digitized by Google

tappet varies according to its position and the picks to the round. Plain tappets placed under the shafts average $1\frac{1}{4}''$. Tappets for 3, 4, and 5 picks to the round similarly placed vary from 2″ to $2\frac{1}{2}''$. If, placed at the loom end, for 3, 4, or 5 picks, from $2\frac{1}{2}''$ to 3″. Above 5 to the round, plates are increased considerably in size; a Woodcroft being 17″ in diameter for 3 to 16 picks, and larger still for higher picks.

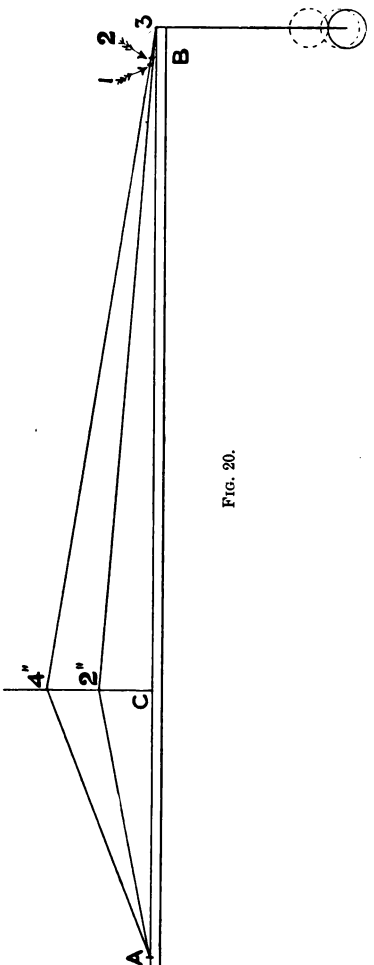

FIG. 20.

The nature of the motion to be imparted to healds is manifestly such that the least strain will be put upon the warp. Two methods are available for the accomplishment of this object, and when both are combined, as far as possible, the best results will follow. First, by making the pause as short as practicable, the maximum of time for forming a shed will be allowed; and secondly, by moving

Digitized by Google

the shafts quickest at the middle of their journey (for at that place there is least strain upon the warp), then gradually reducing their velocity as the upper and lower lines are approached, which simply means that, as strain increases, velocity shall decrease. By adopting these plans all jerks are avoided, and an approximately equal strain is maintained throughout the entire movement.

Before attempting to fix the period during which a heald is to remain inactive, it must be clearly understood that movement only takes place when it is absolutely necessary. This applies not only to patterns that require a warp thread lifting over several successive picks of weft, but also to those in which a thread never remains up for more than a single pick. Such being the case, tappets should be so made that healds will be stationary when the shuttle passes through the warp; and this stationary period is known as pause or dwell. Simple as the matter seems, it is surrounded with difficulties, for the make of fabric has to be taken into account.

Sometimes warp threads are allowed to run in pairs throughout the piece without being looked upon as a serious defect; such material is said to be reed-marked, or without cover, and tappets for weaving it can be made with a minimum of pause—namely, just sufficient to allow a shuttle to move across, and that varies from $\frac{1}{4}$ to $\frac{3}{8}$ of a pick, say $\frac{1}{4}$ of a pick. But where cover is put on, and all threads are equidistant, also when heavy fabrics are produced, a longer pause must be given—$\frac{1}{2}$, $\frac{2}{5}$, and $\frac{1}{3}$ of a pick pause are not uncommon.

The correct dwell for a tappet has been defined as follows:—Divide the circle described by the cranks into 12 equal parts, as in Fig. 21. Number 1 represents the reed in contact with the cloth; at 4 the shuttle begins to

Digitized by Google

move; at 5 it enters the warp; at 9 it leaves it; at 10 it is stationary in the opposite shuttle-box. From 9 to 5 equals $\frac{2}{3}$ of a revolution, and is the time allowed for making changes in the position of healds; from 5 to 9 equals $\frac{1}{3}$ of a revolution, during which all healds must remain stationary.

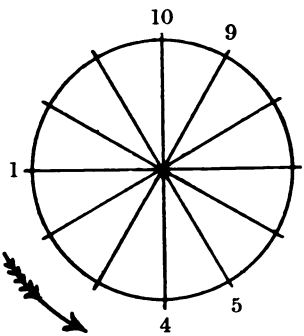

FIG. 21.

A dwell of $\frac{2}{3}$ of a pick has been advocated for heavy fabrics, and others requiring good cover, but this appears unnecessarily long, for it must be borne in mind that as time for making changes is reduced, strain upon the warp is increased. The writer has examined many tappets made by different loom-makers, but has found few with a dwell exceeding $\frac{1}{2}$ a pick. The majority of tappets now in use in Lancashire for the production of fabrics with a good cover have only $\frac{1}{3}$ of a pick for dwell.

Cover can be obtained by other means, but that will be dealt with at a later stage.

The last of the points named refers to the treadle bowl employed to elevate or depress a tappet treadle without setting up undue friction at the points of contact. Generally speaking, a large roller works better and gives a steadier motion than a small one, but beyond this its diameter is of little importance, provided the incline on the tappet surface is not rendered too steep by the use of a large roller. The diameters in common use vary from $1\frac{3}{4}''$ to $3\frac{1}{2}''$, the smaller ones being used with tappets having the greatest number of picks to a repeat. A tappet-

Digitized by Google

maker must carefully consider what effect an antifriction roller has upon the motion of healds, or they will rise and fall at times, and speeds, other than those intended.

A tappet has its surface formed into a series of elevated and depressed parts, more or less resembling teeth in a wheel. It is self-evident that a *point* could be made to

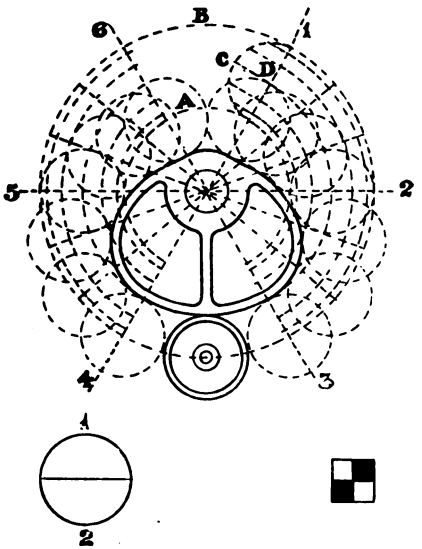

FIG. 22.

follow the most minute variations of such a surface; but it is impossible to use a point, for that has position but not magnitude; therefore an antifriction roller, which has its centre where its point should be, is employed, and, as a consequence, it is capable of filling, or partly filling, the space between two teeth, and also of touching two parts of the tappet surface at one time. Whatever space exists between the extreme points so touched is lost to the pause

Digitized by Google

of the healds, and one begins to rise or fall before another. The only plan by which this difficulty can be overcome is to make the *roller centre* move exactly as the healds are required to move, and to do this the size of tappet must be reduced to allow for the size of roller. If a tappet is constructed for one roller it will never work as satisfactorily with one of any other dimensions.

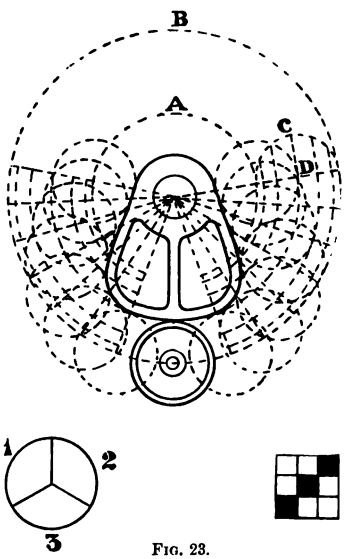

FIG. 23.

Enough has been said of the requirements of a tappet to enable the student to proceed with its construction.

Fig. 22 is a negative tappet constructed to weave plain cloth. Fig. 23 one for a three-thread twill, one down, two up. Figs. 24 and 25 are four-thread twills, one down and three up, and two up and two down for each pick. Fig. 28 is a positive tappet for the 6-pick pattern which accompanies it.

Assume the plain cloth tappet to be $1\frac{1}{4}''$ from centre to thinnest part, to have a lift of $3''$, a dwell of $\frac{1}{3}$ of a pick, and a treadle bowl $3''$ in diameter.

Describe circle *a* (Fig. 22) equal in radius to the distance between centre of tappet shaft and centre of treadle bowl when bowl is touching thinnest part of tappet $= 1\frac{1}{4}'' +$ radius of bowl $1\frac{1}{2}'' = 2\frac{3}{4}''$, add to that the lift of tappet $3'' = 2\frac{3}{4}'' + 3'' = 5\frac{3}{4}''$, and describe a second circle *b*.

Digitized by Google

When in action the treadle bowl constantly works on or between these lines. Divide the circles into two equal parts, because the pattern has 2 picks to a repeat, by lines 1, 4. Subdivide each space into three equal parts, and draw radial lines 1, 2, 3, 4, 5, 6. Space 1, 3, equals $\frac{2}{3}$ of a pick, and is to be used for moving a shaft for the first pick. Space 3, 4, equals $\frac{1}{3}$ of a pick, allowed for dwell. Divide spaces 1, 3, for the first, and 4, 6, for the second picks, also by radial lines, into any number of equal parts, say 6 each. Describe a semicircle *c* upon any one of the radial lines, equal in diameter to the space between circles *a*, *b*, and touching both; divide its periphery into equal parts corresponding in number to those in division 1, 3—namely 6. From each point of intersection on the periphery of the semicircle drop a line *d* perpendicular to its diameter line; the latter will then be divided into unequal spaces for the purpose of imparting an unequal velocity to the heald. Through each point on the diameter line describe a circle concentric with *a*, *b*. Consider each point, where a radial line is cut by a curved one, as the centre of the treadle bowl at different parts of the lift, then from those points, beginning on the outer circle, and taking the others in rotation, describe circles equal in

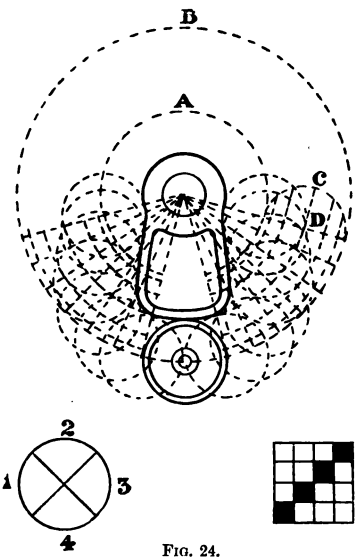

FIG. 24.

Digitized by Google

diameter to the treadle bowl, and the construction lines are completed.

To find the shape of tappet, draw a line touching the periphery of each bowl circle, and where the heald is to be stationary, describe an arc from the tappet centre.

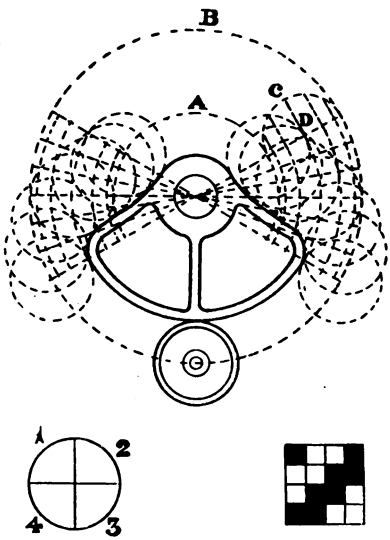

FIG. 25.

What remains to be done is merely a question of removing surplus metal, as clearly shown in Figs. 22, 23, 24, and 25.

A tappet treadle swings on its fulcrum pin, and causes the points of contact between bowl and tappet, relatively to the centre of the latter, to change continually; but the movement required is a rise and fall in a straight line, hence to approximate to the best motion, the treadle fulcrum and bowl centres should be in the same horizontal plane at half the lift; and bowl and tappet centres should

Digitized by Google

then coincide, or the treadle will neutralise to some extent the lift aimed at in constructing the curved surfaces of the plates. Treadles must be in contact with tappet at every point of its revolution, or the healds will have a jerky movement.

In order to place warp level where the shuttle enters it, a back shaft must rise higher and sink lower than a front one; but this cannot be accomplished if all the tappet plates are of one size and the treadle fulcrum pin is at the back of loom, for the connection to back shaft is made at a point nearer the fulcrum than for a front shaft, hence its movement would be less instead of greater; so it is usual to give an increased lift to a back plate of from $\frac{1}{8}''$ to $\frac{1}{4}''$, but on an average it equals $\frac{5}{32}''$ more than a front one.

If a treadle fulcrum is at the front of a loom the back shaft connection is further from it than that of the front shaft, for which reason all plates are of one size, and the difference in leverage gives the difference in lift.

If the stepped rollers, called cones, are properly constructed, heald straps will be kept at the same tension at every part of the tappet's revolution; they should be made so each will wind on or off exactly as much strap as its tappet plate gives out or takes up.

Jamieson's Tappet

A negative tappet introduced by Jamieson is much used in certain districts of Lancashire. It is placed under the healds with its axis at right angles to and coinciding with that of the bottom shaft *a*, Fig. 26. At its rear end the tappet shaft *b* has a large bevel wheel *c* to gear into one of two small bevel pinions *e*, *e'*, slided upon shaft *a*, with their teeth facing, for the purpose of driving *c* in either direction.

Digitized by Google

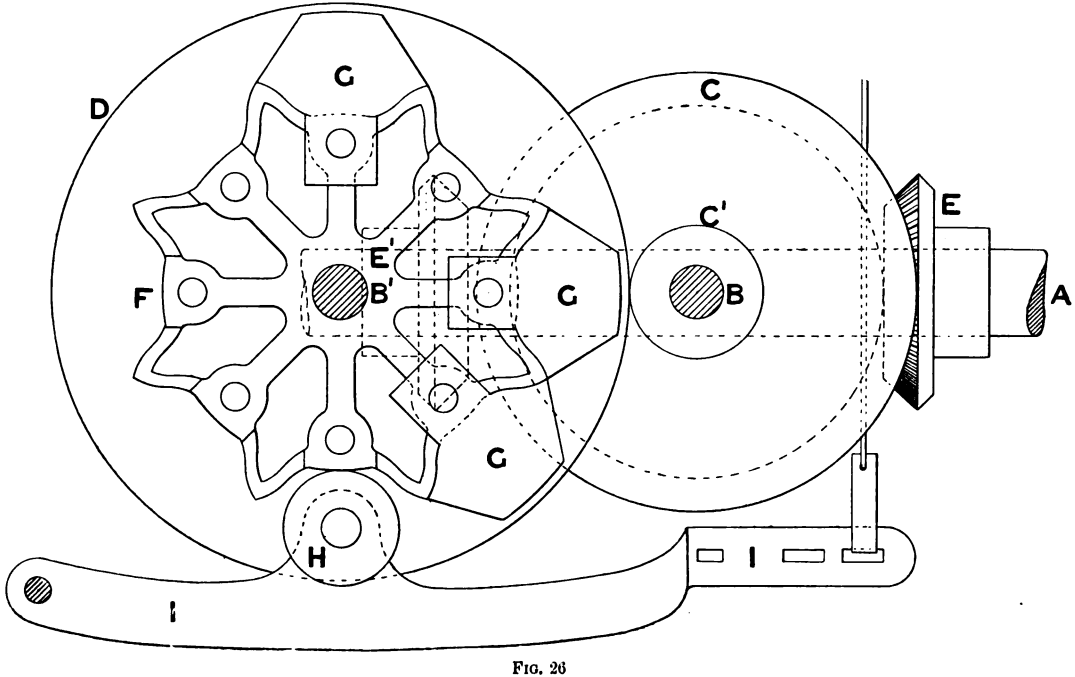

FIG. 26

Digitized by Google

A tappet wheel *d* is keyed upon *b'* to gear with *c'*, and contains a series of bolt holes concentric with *b'* and equidistant from each other; the number of holes equals the picks to the round of the tappet.

Bolts are passed through the holes, and a plate *f* similarly drilled is dropped over them; its periphery has a series of slight curves corresponding with the holes. One of its faces has a number of slotted recesses, through the centre of each a bolt passes, and into which an ear of an interchangeable plate *g* is dropped until a portion of the latter rests upon the outside of *f*. Each plate *g* sinks a shaft, and an uncovered curve upon *f* permits one to be elevated.

It is therefore simply a question of reading from a tie-up, as for a Woodcroft, and placing sinkers in position on as many plates *f* as there are shafts, then bolting the whole firmly together.

Treadles *i* are placed below the tappet, and each has an antifriction bowl riveted to it to work against the projections on *f* and pull the shafts down, but springs attached to a frame above the loom lift them.

Four differently shaped sinkers are sometimes used—one to sink a shaft for a single pick, two serve as right and left hand sinkers when a shaft is to remain down for two or more picks, a fourth gives the dwell, or supports a treadle bowl as it rolls from one rising part to another.

The sinkers are liable to get loose, and the bowls *h* to slip between two plates; beyond this it is a good and useful tappet.

The Barrel Tappet

Another negative tappet known as the barrel motion is also a favourite in some manufacturing centres. It is fixed above and at right angles to the heald shafts. An upright

Digitized by Google

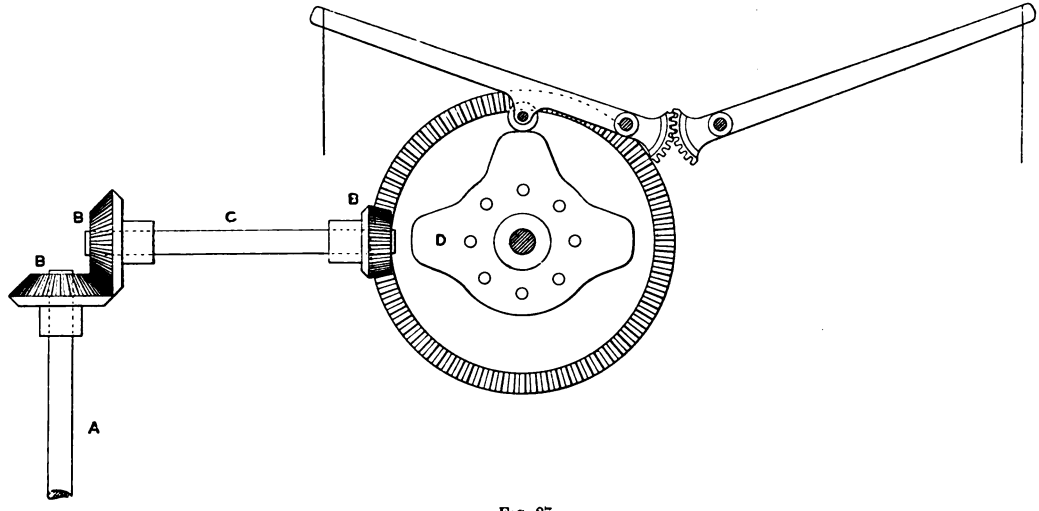

FIG 27.

Digitized by Google

shaft *a* (Fig. 27) and bevel wheels *b* are employed to drive it, either from the bottom, or crank shaft. Some makers resort to the objectionable practice of placing the upright in such a position that it passes through the warp, instead of fixing it to the end framing, and driving tappet *d* through a short horizontal shaft *c*. This arrangement necessitates the use of two additional bevels, but the working parts of a loom are left unobstructed.

The tappet consists of a series of solid plates bolted together or cast in one piece; if the former, a hole is made in every plate exactly in the centre of each pick, so that by turning similar plates into different positions, one with relation to the other, many different patterns can be woven. If the tappet is all cast in one piece fewer changes are possible; but, on the other hand, it is solid, and there is no risk of the bolts working loose.

Treadles rest above the tappet, and springs or other appliances pull the shafts down.

When arranged for bordered fabrics, such as handkerchiefs, towels, cross stripes, or other fabrics requiring two patterns in the same piece, a barrel is furnished with twice as many plates as there are shafts to be moved, and the treadles act on alternate plates. By shifting a lever the tappet makes a lateral movement and slides the other series of plates under the bowls to weave the second pattern.

Positive Tappets

A positive tappet (see Fig. 28) is constructed on similar lines to a negative one, except in so far as a minimum space of $\frac{1}{8}''$ must be provided between the outer and inner flanges above that required for the treadle bowl, to leave

Digitized by Google

room for its easy working, and reduce the chances of it becoming blocked by an accumulation of dirt.

In setting out one of these tappets it is a common practice to add $\frac{1}{8}''$ to the lift, and after finding the points of intersection between radial and concentric lines, as explained on p. 40, to describe circles round each, of a diameter exceeding that of the treadle bowl by $\frac{1}{8}''$, then

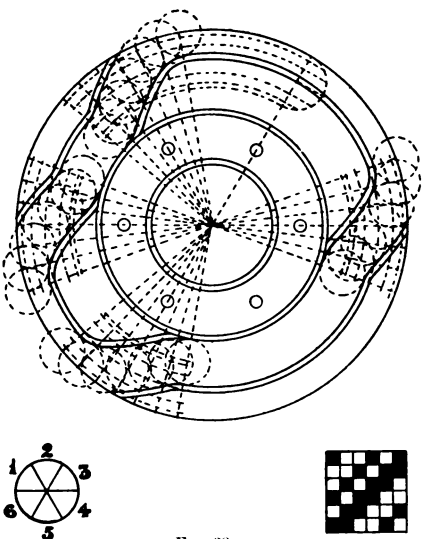

FIG. 28.

to draw lines touching their peripheries at two points, which trace the inner and outer flanges.

After that it only remains to add the required thickness and depth to give the necessary strength and surface for the bowl to run against.

An inward curve on the outside flange equals a lifted shaft, and an outward curve on the inner flange a depressed one.

Digitized by Google

Woodcroft's Tappet

In 1838 Woodcroft patented a positive tappet that is still largely used for heavy work, and also where eight or more picks to the pattern are required.

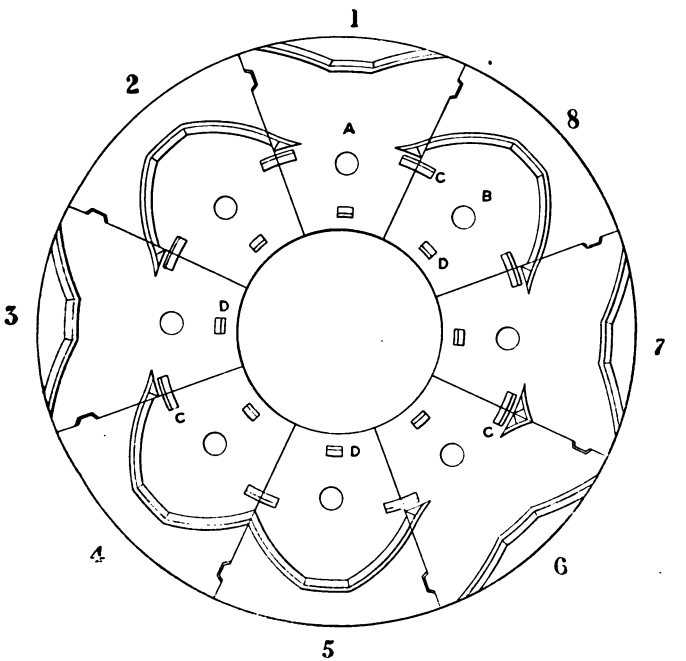

Fig. 29.

It consists of corresponding sections cast with an elevator or depressor on each, which, when placed together, form the entire plate. By changing the relative positions and thus forming new combinations of sections, patterns may be varied at small cost, provided the picks in the new

Digitized by Google

pattern equal the number of sections in a full plate, or that two or more full patterns are contained on a plate. For example, in a tappet known as "16 to the round" a section equals $\frac{1}{16}$ of a plate, therefore any pattern of 2, 4, 8, or 16 picks can be made with the same sections if suitably arranged, but if a pattern has any other number of picks, new sections must be used.

In Fig. 29 *a* shows the form of an elevator, and *b* a depressor.

Dark squares on the slip of design paper (Fig. 30) indicate a rising shaft, and blank squares a sinking shaft. As eight squares are used, eight to the round sections are necessary, and they must be placed to correspond with the position of the tappet and the direction of its motion. If fixed at the right-hand end of loom, to revolve in an opposite direction to the crank shaft, place the tappet wheel before you, with a number of bolts previously passed through the bolt holes provided. Lay an elevator in position (number 1 on the design paper) and follow with number 2 a depressor, on the left side of number 1.

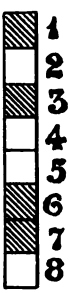

FIG. 30.

Continue reading from the design and laying the sections until all are in position; then put the outer flange of a ring (Fig. 31) between projections *c*, and its inner flange below *d* to lock all together. Proceed to form other circles of sections from similar slips of design paper, one for each heald shaft employed, always beginning immediately above number 1 of the first plate. Bolt all together and the tappet is ready for the loom.

When a tappet revolves in the same direction as the crank shaft, lay the second section on the right of number 1.

A tappet fixed at the left-hand end of loom, to revolve

Digitized by Google

in an opposite direction to the crank shaft, requires a ring to be first placed upon a blank plate on the tappet wheel, and the second section laid to the right of the first, and all face side down, or the treadle bowls cannot be made to run in the groove between two plates.

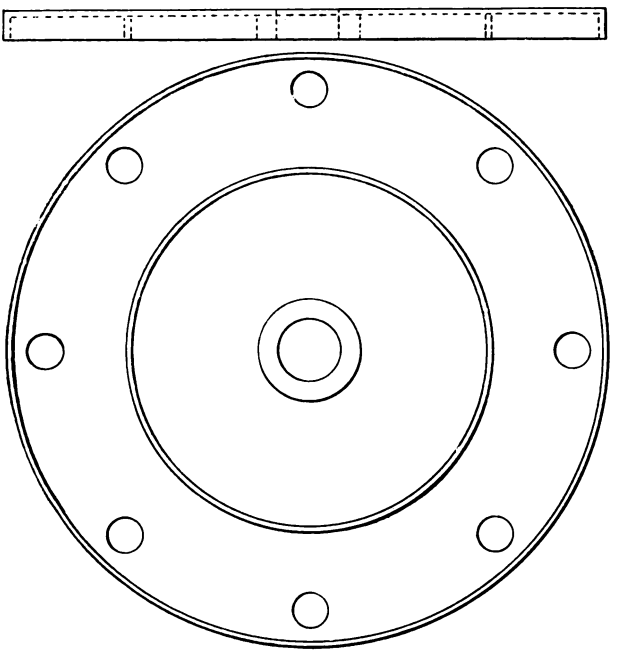

FIG. 31.

If turned in the same direction as cranks, lay the second section on the left of number 1.

As mentioned on p. 21, Woodcroft's tappet is now made to produce open shedding, but the parts are somewhat complicated, for, in place of using duplicates of two

Digitized by Google

sections for each plate, eight distinct sections are necessary—namely, ordinary risers and sinkers, right and left hand risers, right and left hand sinkers, riser dwells and sinker dwells.

Each section is clearly shown in Fig. 32 : number 1 is a

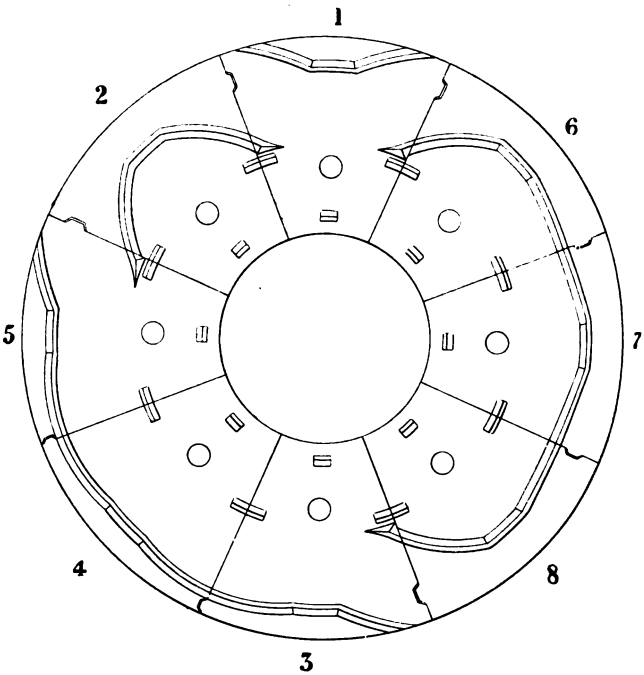

FIG. 32.

riser ; 2, a sinker ; 3, a left-hand riser ; 4, a riser dwell : 5, a right-hand riser ; 6, a left-hand sinker ; 7, a sinker dwell ; and 8, a right-hand sinker.

With the above exceptions plates are laid in the manner described on the preceding pages.

Digitized by Google

In Fig. 33 an antifriction roller *f*, carried by a treadle centred at *e*, is pushed up and down by the sections and imparts an oscillating motion to the outer end of *g*. Straps and cords pass up and down from treadle *g* to top and bottom jacks *h*, *i*, which are fixed in the loom at right angles to *g*, but in the sketch are turned from their working posi-

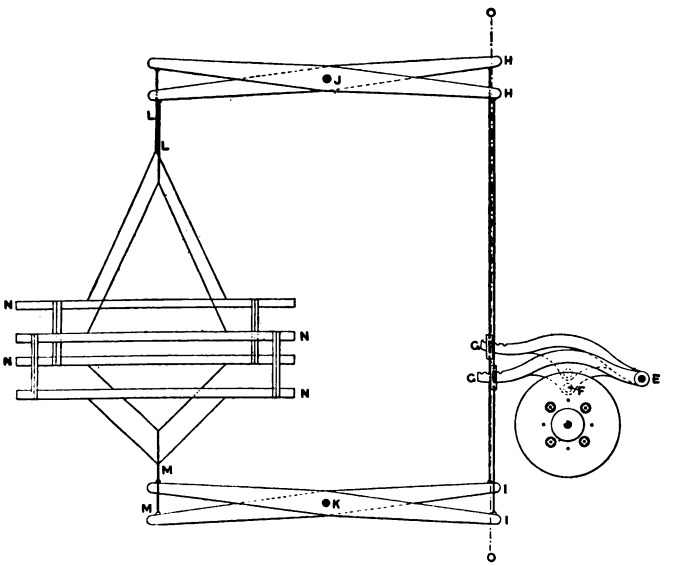

FIG. 33.

tions through an angle of 90°, in order to open them out and show the working more distinctly. The dotted line *o* indicates the hinge on which the parts are turned. The fulcrum pins of *h*, *i*, are shown at *j*, *k*; other cords, *l*, *m*, pass down and up to the top and bottom heald shafts; therefore if treadle *g* is raised shaft *n* is depressed, or if *g* is depressed *n* is raised.

A Woodcroft tappet is not so firm as one made from

Digitized by Google

solid plates, and there is a constant tendency for the treadles to leave the tappet in cases where warp threads are too few to put considerable strain upon the shafts. To prevent which, springs and weights are attached near the fulcrum pin of the treadles to hold them down.

Oscillating Tappet

Chains of various kinds have been used for more than fifty years as shedding motions. Clarke's invention dates from 1840; Knowles's from 1849. Several others have also been patented at different times, of which Nuttall's is one of the best; his chain is composed of rollers *a* and collars *b* (Fig. 34) pushed upon long spindles *c*, the latter are connected at each end by flat links *d*. A roller lifts a shaft, a collar sinks one, and at the same time holds the rollers in their proper places. The chain is divided into two parts—one containing all the odd picks, and the other all the even picks. Both are passed round eight-sided barrels *e*, that are free to turn in bearings attached to the tappet. A flat piece of metal *f*, weighted at its outer end, forming part of an elbow lever *g*, rests upon the chain, and is elevated by a roller, but falls by gravity if a collar is upon the uppermost side of barrel *e*; this imparts a corresponding motion to *g*, which has a projection *h* that enters a slot in tappet plate *i*; the latter, being fulcrumed at *j*, is lifted by a roller into the position shown at *i*, on the right of the drawing, but a collar leaves it, as at *i* on the left. The tappet is made to oscillate in the following manner:—Pinion 1 (Fig. 35), on the crank shaft drives carrier wheel 2 round stud *m*, and it gears with slide wheel 3; the teeth in the latter must be in the proportion of two to one in the pinion. A boss compounds wheel 3 with eccentric 4, they revolve

Digitized by Google

upon stud *k*, and by means of eccentric strap, and arm *n*, a connection is made with a lever *o* centred at *p*, that carries a second arm *q*, which is fastened to pin *r* on the tappet. As 4 goes round the tappet rocks, if to the left, treadle bowl *s* (Fig. 34) will run along the under side of *i*, depress a treadle *t* vibrating on pin *l* in the loom framing and lift a heald shaft; but if the tappet rocks to the right, *s* will roll

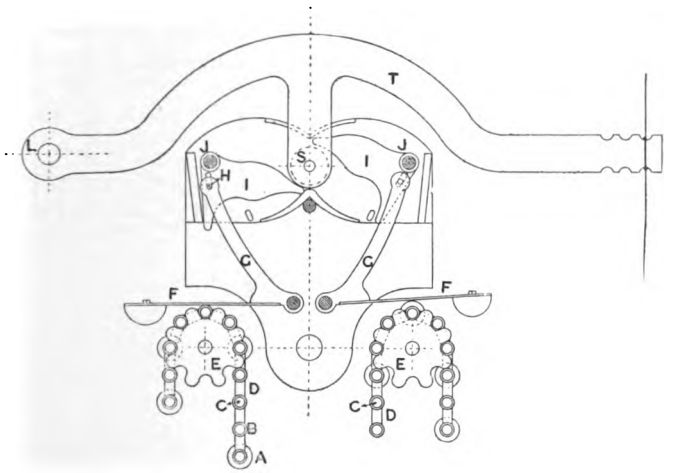

FIG. 34.

along the upper side of *i*, elevate *t*, and depress a shaft, for heald connections (Fig. 14) are similar to those of a Woodcroft tappet. Bowl *s* can run above or below the plates *i*, *i*, any number of times in succession, its position depending entirely upon the construction of the chains; the latter must be rotated to place the picks progressively in the fabric; this is accomplished by slide and star wheels; thus the slide wheel 3 (Fig. 35) has a circular flange 5 shown broken at the top where stud 6 is inserted. Star wheels *e*, *e*, are respectively keyed upon each chain barrel, and as slide 3

Digitized by Google

revolves, it carries stud 6 alternately into a notch of stars

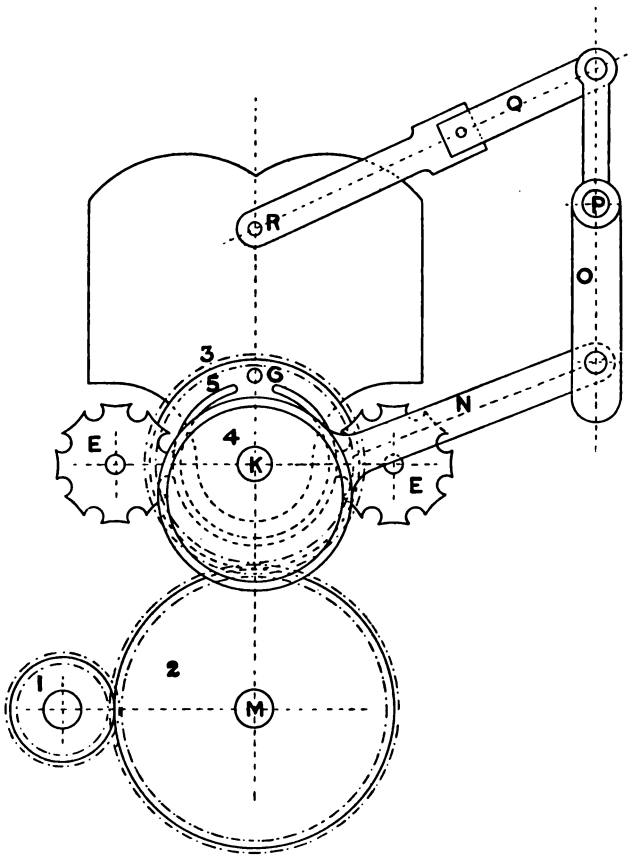

FIG. 35.

e, *e*; and every time this takes place, a barrel is turned $\frac{1}{8}$ of a revolution.

The advantages of this motion are: that it is positive; that long patterns of from 80 to 100 picks can be woven

Digitized by Google

if the tappet centre is placed above the crank shaft, because the chain is divided into two parts; that the same bowls, collars, and pins can be used for all patterns by simply relaying the chain, but it is more suitable for heavy than light fabrics.

Nuttall's Chain

Another positive chain tappet, patented by James Nuttall, is also much used in districts where heavy goods

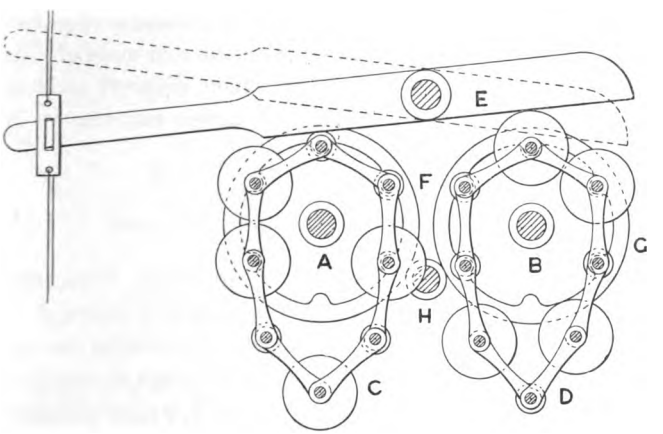

Fig. 36.

are made. All its parts are contained in a movable stand that can be taken to the end of any loom, fixed to the floor, and driven by a pinion from the crank shaft. It consists of two parallel chain barrels, *a*, *b* (Fig. 36), which are provided with suitable bearings, and employed to rotate chains, *c*, *d*, at the required rate through spur wheels, *f*, *g*, keyed upon the barrel shafts; *f*, *g* are connected by a small carrier, *h*, that turns both in the same direction. The chains

Digitized by Google

are composed of rollers and collars, not unlike those on the oscillating tappet, but here a collar on one barrel must be opposite a roller on the other, for both chains move at the same time, and act upon the same straight levers, one of which is shown at *e* resting upon them. This lever is fulcrumed midway between the centres of *a*, *b*, and its rear end projects slightly beyond *b*, but its forward end is long enough to permit of a strap attachment for cording to the upper and lower jacks.

The tappet is not so well adapted for long patterns as the oscillator, for practically a link of each chain is required for a single pick; the first to elevate the rear ends of *e* to lift shafts, and the second to elevate their forward ends to depress shafts; but it is positive in action and simple in construction.

Tappet Driving

Tappets are driven, directly or indirectly, from the crank shaft by spur wheels, and whenever convenient, it is best to have a large one on the tappet and a smaller one on the crank shaft, as then the proportion equals the revolutions of the two shafts; thus a 4-picked tappet requires a wheel with four times as many teeth as that on the crank shaft; or put in another form—if a tappet wheel containing 120 teeth is to drive a tappet at the loom end, having 2 picks to the round, $120 \div 2 = 60$ teeth in the driving wheel. If 5 picks to the round, $120 \div 5 = 24$ teeth. But it frequently happens that two wheels will not answer, because both shafts are fixed, and the wheels, if not of a proper size, will not gear; in such cases a carrier or carriers are employed (see taking up calculations, Part XIX.). A single carrier will cause a tappet to revolve in the opposite

Digitized by Google

direction to one without, or with two carriers. Fig. 37 shows the tappets placed under the healds, but driven from a short shaft a, to which motion is given by crank wheel b, bottom shaft wheel c, a second wheel d on the same shaft, a carrier e, and tappet wheel f. If $b = 40$,

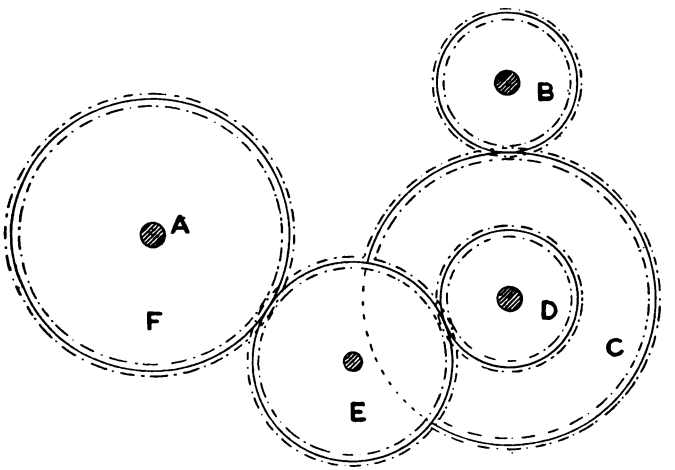

FIG. 37.

$c = 80$, $d = 20$, and $f = 40$ teeth respectively, the revolutions of a will be to those of crank shaft as

$$\frac{40 \times 20}{80 \times 40} = \frac{1}{4} = 1 : 4.$$

Plain cloth tappets are generally keyed to the bottom shaft, because picks to the round = 2, and revolutions of shaft = $\frac{1}{2}$ those of cranks.

It is not unusual to employ compounded intermediate wheels to drive tappets having a large number of picks to the round; the intermediates work loosely on a stud, the larger one gears into the crank shaft wheel, and the smaller

Digitized by Google

one into the tappet wheel. There are thus two driving and two driven wheels. As a rule the tappet wheel is bolted to the tappet and cannot be changed, but the three remaining can be found by dividing the tappet wheel by any number that will not leave a fraction. The divisor will give the teeth for one pinion, the quotient will give the other; the picks to the round give the first driver, and the tappet wheel is the second; thus, in a 16-picked tappet, with a wheel of 180 teeth—

$180 \div 15 = 12 . \therefore$ 12 into 16 (the picks) and 15 into 180.

for proof $\frac{15 \times 12}{16 \times 180} = \frac{1}{16}$ or 16 revolutions to 1.

Again, $180 \div 12 = 20 . \therefore \frac{12 \times 20}{16 \times 180} = \frac{1}{16}$.

But assuming that a wheel with fewer than 20 teeth cannot be used, any multiple of the numbers obtained will answer, as 15×2, 12×2; but the tappet wheel being fixed, 16 must be multiplied by 4, because the teeth in driving wheels have been increased fourfold, and to maintain the ratio, teeth in driven must be proportionately increased.

$$\therefore 16 \times 4 = 64. \quad \text{For proof } \frac{30 \times 24}{64 \times 180} = \frac{1}{16}.$$

Both intermediate wheels can be found if crank pinion and tappet wheels are given, by rule—

$$\frac{\text{Picks required} \times \text{pinion}}{\text{Teeth in tappet wheel}}.$$

Example.—If 20 pinion and 120 tappet wheels are used to drive a tappet of 12 to the round, what intermediates are required?

$$\frac{20 \times 12}{120} = \frac{2}{1} . \therefore \text{ any wheels in the ratio of 2 to 1.}$$

Digitized by Google

Changing one wheel is often sufficient; it may be a driver or a driven, but the rules are—

$$\frac{\text{Driving wheels} \times \text{picks to the round}}{\text{Driven wheel}} = \left\{ \begin{array}{l} \text{teeth required for a} \\ \text{driven wheel;} \end{array} \right.$$

and

$$\frac{\text{Driven wheels}}{\text{Driver} \times \text{picks to the round}} = \text{teeth in a driving wheel.}$$

Scroll tappets are rapidly becoming favourites in those centres where coloured shirtings are manufactured, and they appear to be well adapted to the production of narrow stripes and chain effects. In such cases scrolls merely govern a few threads that rise for three, four, or more picks in succession, and then remain depressed for an equal number of picks, whilst all remaining warp is actuated by tappets of the usual form.

The scroll, as a shedding motion, is by no means a recent invention, nor does it appear likely to be ever employed for general purposes; it is similar in construction to a picking scroll (see Part X. Fig. 171), but the half-moon is attached to a tappet treadle.

Pendulum and other tappets are frequently met with, most of which are capable of producing good work, but want of space precludes a detailed description.

PART IV

OVER AND UNDER MOTIONS

All negative shedding motions require additional parts to reverse the direction of their action. Such appliances are known as over or under motions. These names seem to imply two classes of mechanism, but in reality the dis-

Digitized by Google

tinction is merely one of position. If a tappet is placed under the healds, an over motion is used, but if it is placed over them, or at one end of the loom, an under motion becomes necessary. Reversing motions may, however, be grouped as *a*, single acting; *b*, compound acting. In the former, each part is only capable of exerting force upon a single shaft; but in the latter, each part can be made to act simultaneously on all the shafts in a set except one. Before proceeding to describe these motions, a short time may be well spent on an examination of the nature of the work to be done by them.

It has been previously shown that a negative tappet can move a shaft in one direction without outside aid; this being the case, the action of an over or under motion should begin immediately that of a tappet ceases, and continue with increasing force until the termination of the shaft's journey is reached, where its maximum power must be exerted and maintained until the tappet is again brought into use. During the period of the latter's action little or no force is needed to oppose it, for if a moving shaft is kept steady, nothing more is required, and any additional strain is power wasted. These remarks are especially applicable to centre and open shedding, where in both cases the tension upon the warp threads exerts its greatest power to pull the shafts down or up to the closed shed line at a time when the reversing gear has to resist such strain unaided by other parts of the shedding motion.

Single Acting Motions

Single acting motions are generally composed of dead weights, spiral springs, or elastic cords (see Figs. 38, 39), which are attached to the heald shafts, but none of them

Digitized by Google

are mechanically correct. A weight exerts equal power at every point, no matter whether the tappet is acting or has ceased to act. Undesirable as this is, weights nevertheless more nearly approach our ideal than springs, and they are invariably employed for Jacquard shedding, but have not met with much favour when applied to shaft work. Their defects are obvious; if rapid reciprocating motion is imparted to weights more or less free at one end, an unsteady, swinging action is frequently set up, and even when swinging is prevented by confining the weights in grids, considerable friction results.

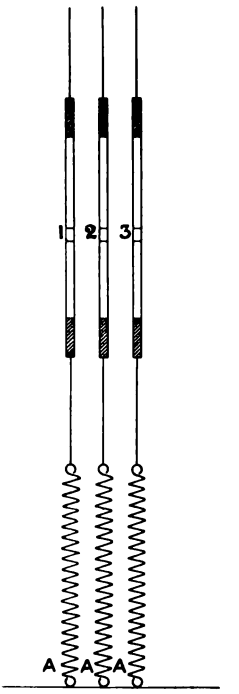

FIG. 38.

Another objection based on a well-known law in mechanics has been raised against the use of dead weights, viz. the shorter the time during which a body is allowed to fall, the slower its movement. Those who object to weights on this account say that the rapidity of motion required, and the short space through which they have to move, sometimes result in changes being completed in one part of a harness before they are completed in another part.

If what has been said respecting the functions of reversing motions is accepted as the true principles which ought to govern their action, it will be an easy matter to show that a spiral spring is one of the most defective pieces of mechanism for the purpose that can well be imagined. A spring must be stretched until it exerts sufficient force to pull the warp threads it controls level with the top or bottom shed lines when the tappet is inoperative; and

Digitized by Google

therefore the further a tappet moves a heald from that point, the more a spring is stretched, and the greater the

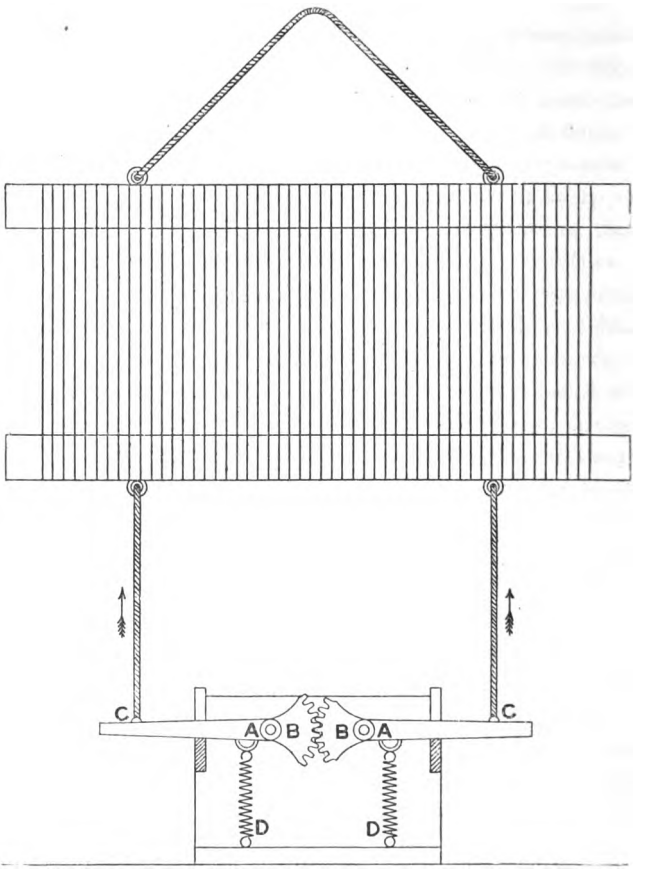

FIG. 39.

force it exerts to oppose that of the tappet. On the latter ceasing to act, the former is exerting its maximum power

Digitized by Google

to pull the heald shaft in the opposite direction, and this takes place when least power is needed. Immediately a reversion occurs the spring contracts, and its force decreases in proportion to that of its increase when stretched until a point is reached where its effectiveness is most needed, then it exerts its minimum force. A spring is thus seen to be strongest where it should be weakest, and weakest where it should be strongest.

If a comparison of the power consumed by springs and dead weights is made, this point will be rendered clearer.

On the assumption that a force equal to a weight of 10 lbs. is needed to hold a heald shaft stationary, a spiral spring must be stretched until it is capable of exerting that force. If it is further assumed that such stretch = 1″, and the movement of the heald = 4″, then as the force of a spring increases uniformly $10 \times 5 = 50$ lbs., the power exerted when it is not wanted, and 10 lbs. its effective force.

Or put into units of inch pounds $50 \div 2 = 25$ lbs., the mean power, and $25 \times 5 = 125$ inch pounds.

A dead weight of 10 lbs. exerts equal force at all points, $\therefore$ inch pounds $= 10 \times 4 = 40$.

It is thus seen that under the above conditions the work done during one movement of a shaft is with weights 40 inch pounds, and with springs 125 inch pounds.

Notwithstanding the faults inherent in spiral springs, they are more extensively used in Lancashire for light and medium fabrics requiring 6 shafts or more than any other appliance, probably because they are readily fixed and easy to understand. Inventors have, however, endeavoured to introduce motions with a spring basis so arranged that as a shaft moves the full force of a spring will not be exerted upon it. The following illustrate two of the attempts made to solve this problem :—

Digitized by Google

Spring-easing Motions

Messrs. Hahlo, Liebreich, & Hanson have a patent easing motion for allowing a shaft to move from the bottom to the top shed without stretching a spring an

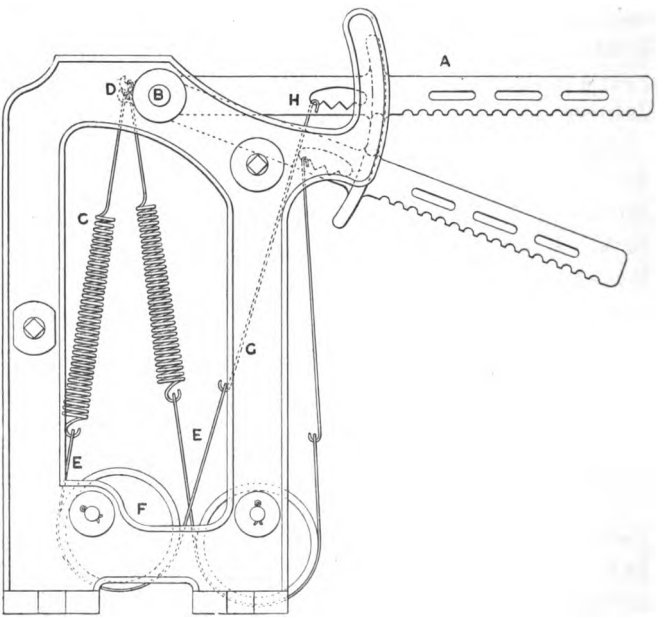

Fig. 40.

equal distance. In construction the motion is simple, and the parts are not liable to get out of order. They consist of lever *a* (Fig. 40) fulcrumed at *b*, to which the upper end of spiral *c* is attached by a wing nut and screw used to regulate the tension, or as shown at *d*. The lower end of *c* is fastened by strap *e* upon eccentric *f*, whence *e* passes

Digitized by Google

to hook *g*, and connection with lever *a* is again made at point *h*.

A heald shaft is connected to the outer end of *a*. Therefore, as *a* and *g* ascend together, the latter will pull strap from the thick side of eccentric *f* and wind it upon the thin side; but point *d* moves down simultaneously, and thus prevents spring *c* from stretching in proportion to the winding of strap *e* upon eccentric *f*. The surface of *f* and the position of *d* are so contrived that, for a movement of 5″ in a shaft, spring *c* will be stretched $\frac{3}{4}$″; this results in a considerable saving of power as compared with springs used in the ordinary way. Thus, on the former assumption of 10 lbs. equalling the weight required, and also a stretch of 1″, an ordinary spring will exert a force of $5 \times 10 + 10 = 60$ lbs., but used as in the above motion equals a force of $10 \times \frac{3}{4}$ of $10 = 17\frac{1}{2}$ lbs.

KENYON'S UNDER-MOTION

Kenyon's motion is equally simple, but it acts in a somewhat different manner upon the shafts.

In Fig. 41 two chairs, *a*, *b*, are placed back to back and bolted upon a rail *c*, on which bolts and drag nuts provide for moving the chairs nearer to or farther from each other in case spring *d* is too strong or too weak. Chains *e*, *f* are hooked into opposite ends of *d*, and are respectively connected to the hooked parts of curved levers *g*, *h*; the latter move partly round fulcrum pins *i*, *j*, and at *k*, *l* straps pass to a shaft *m*.

The form of levers *g*, *h* causes spring *d* to be elevated and depressed as its shaft rises and falls, and the distance so lifted equals a loss of stretch in spring *d*; but that is not all, for when points of connection *n*, *o* are below centres

Digitized by Google

of pins *i*, *j*, the principal stress is upon the shaft, but immediately that centre is passed, an increasing stress is transferred to the fulcrum pins, with the result that the actual stretch of spring does not represent the force applied to pull a heald down.

For example, it was found that a lift of 5″ stretched spring *d* 2¾″, which, under the previously assumed conditions, would equal $2\frac{3}{4} \times 10 + 10$ or $37\frac{1}{2}$ lbs. when at the highest point, and 10 lbs. when at the lowest. An actual test

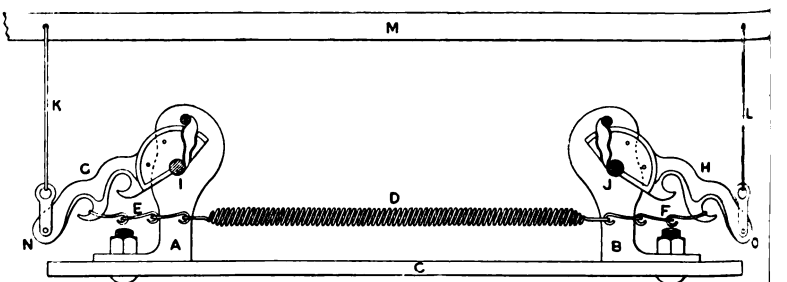

FIG. 41.

made with a spring balance gave the ratio of stress as 12½ lbs. for a closed, and 6¼ lbs. for a shed opened 5″. Taken inch by inch the stress varied as follows :—Closed shed, 12½ lbs. ; first inch of lift, 11¼ lbs. ; second inch, 8¾ lbs. ; third inch, 6¾ lbs. ; fourth inch, 5½ lbs. ; and fifth inch, 6¼ lbs.

COMPOUND MOTIONS

The second class of reversing motions, known as stocks and bowls, are all based on the compensating principle; this consists in making a rising or falling shaft help to move another in the opposite direction. Whenever such a motion can be successfully applied, a given piece of work

Digitized by Google

will be performed with a smaller consumption of power than with weights or ordinary spiral springs.

An approximation to the relative consumption of power between weights and stocks and bowls can be obtained as follows :—

Assume the closed line of warp to be midway between the highest and lowest points, and that the power required to move a shaft up or down from such position equals one unit of work, then the weight upon the shaft must equal one unit, or it would not occupy its proper position. In lifting a shaft from the lowest to the highest point one unit will be consumed in moving it to the centre—namely, lifting the weight—and two additional units will be used between the centre and top line—one in moving the weight, the other in moving the warp; therefore three units of work will be taken from the engine for each upward motion of the shaft, but the weight will exert sufficient force to carry the warp back to its lowest point.

With stocks and bowls working under similar conditions the tension of the warp is sufficient to lift and sink shafts which are coupled, to the closed position; therefore, in moving one from bottom to top, and the other from top to bottom simultaneously, two units are required—one for the upward, and one for the downward movement, and two additional units must be used to take the shafts back to their starting-points. Four units of work have thus been taken from the engine, but in this case two shafts are moved to one in the former, consequently the approximate consumption of power with weights is six units to four units with stocks and bowls.

Stocks and bowls consist of levers either circular or oblong in form, to which the shafts are connected, but they can only be employed when the pattern to be woven

Digitized by Google

requires the same number of shafts lifting for every pick. In cases where say two shafts are lifted for one pick, and three for another, a single acting motion must be used.

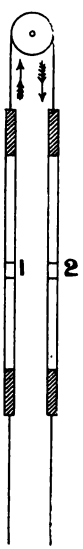

FIG. 42.

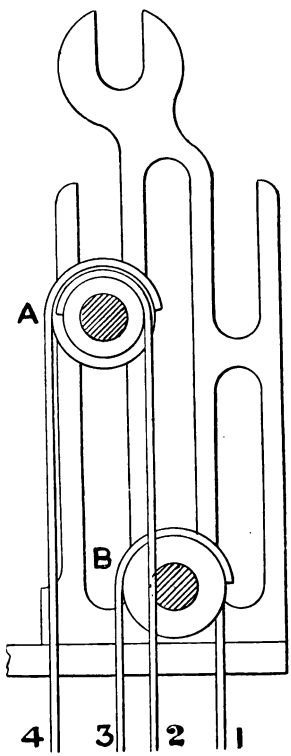

FIG. 43.

Shafts are sometimes connected in pairs to single levers, as seen in Figs. 42 and 43; the former arrangement is for plain, and the latter for twill weaving. This principle can be extended to work any even number of shafts, but

Digitized by Google

half the number employed must go up and half down at each pick. In this form stocks and bowls are therefore inapplicable to a large number of patterns.

But when levers are compounded, as in Figs. 44 to 53, any number of shafts can be carried up or down at one time, provided, as previously stated, the same number go up each pick.

Figs. 44 and 45 are arranged for 4 and 8 shafts. In the

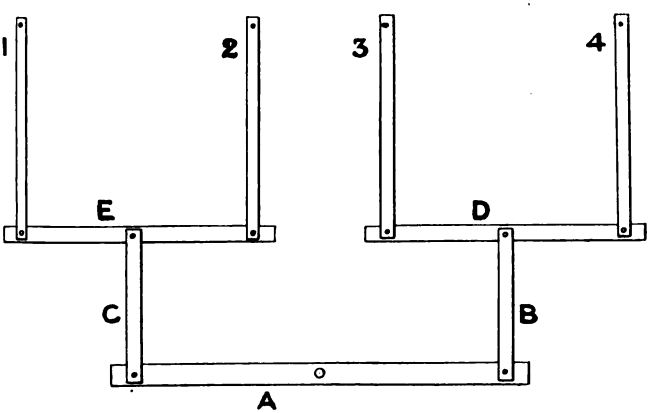

FIG. 44.

first straight levers are employed. Lever *a* supports by means of connecting straps *b*, *c*, levers *d*, *e*, from each end of which a strap 1, 2, 3, or 4 passes to its respective shaft.

Fig. 46 shows an arrangement of bowls for moving a similar number of shafts. A strap passes round bowl *a*, and supports bowls *b*, *c*; strap 1, 2 passes round *b*, and is attached to shafts 1, 2; strap 3, 4 passes round *c*, and is attached to shafts 3, 4.

The remaining motions consist of a larger number of bowls connected to each other and to the shafts in a

Digitized by Google

similar manner to the above, a further description of them being unnecessary.

When an odd number of shafts have to be used more

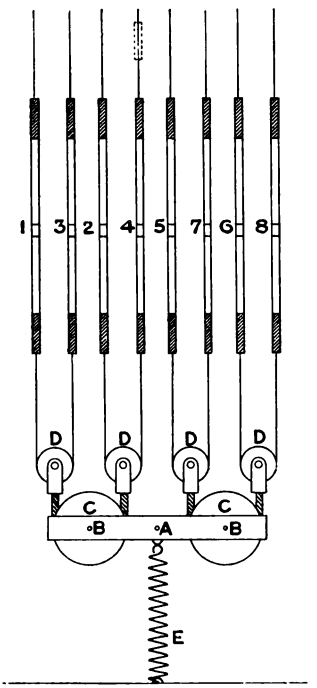

FIG. 45.

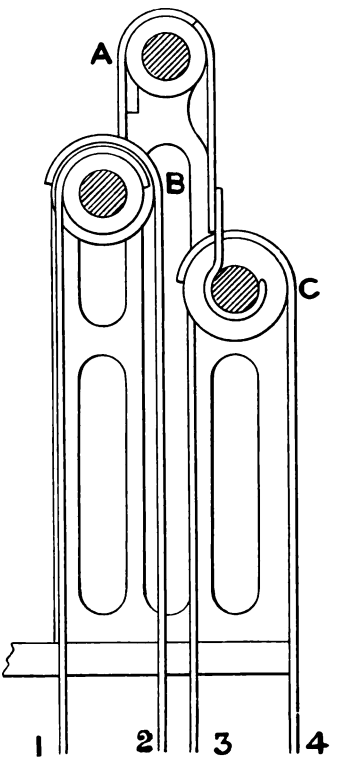

FIG. 46.

bowls are placed at one end of the first lever than at the other; and in all such cases the fulcrum of the first lever must be placed to balance the weight—namely, the number of shafts attached to both ends. Thus in a 3-shaft motion the bottom lever is divided into three equal

Digitized by Google

parts, and the fulcrum pin placed at the first division from the heavy end, as in Fig. 47, where *a* is the bottom lever, *b* the fulcrum pin, *c* a strap passing up to number 1 shaft, *d* a strap supporting lever *e* at its centre, and *f*, *g* straps connected to shafts 2, 3.

When bowls are used throughout, the two lower ones are compounded by fastening both together and screwing a strap to the periphery of each. The diameter of one bowl

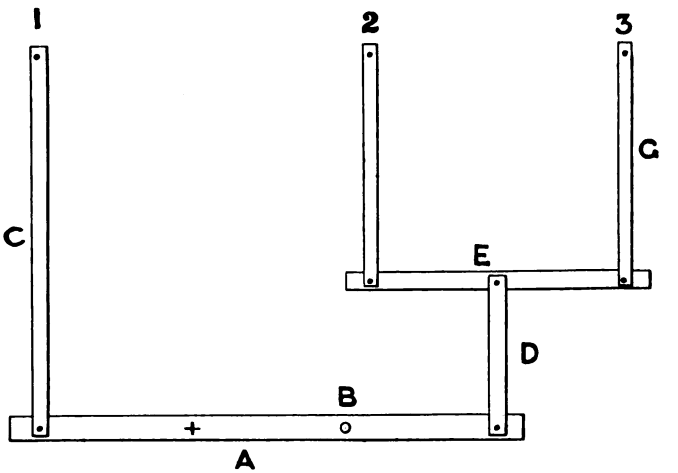

FIG. 47.

must be to that of the other in inverse proportion to the number of shafts each controls. Thus in Fig. 48, which is a 3-shaft arrangement, the diameter of *a* is twice that of *b*, because strap 1, screwed to bowl *a*, is attached to shaft 1 only; but strap 2, screwed to bowl *b*, controls through bowl *c*, and strap 3, shafts 2, 3.

There are many modifications in the details of stocks and bowls, but by suitably combining a 2, 4, 6, or 8 shaft motion with one for 3 shafts, any odd number up to

Digitized by Google

11 shafts can be worked. The following combinations for 5 and 7 shafts will sufficiently explain the methods:—In Fig. 51 a 3-shaft motion (Fig. 48) is attached to one end of a straight lever *a*, and a 2-shaft motion (Fig. 42) to the opposite end; *a* is divided into five equal parts, and the fulcrum pin placed two divisions away from the 3-shaft motion, to balance the weight.

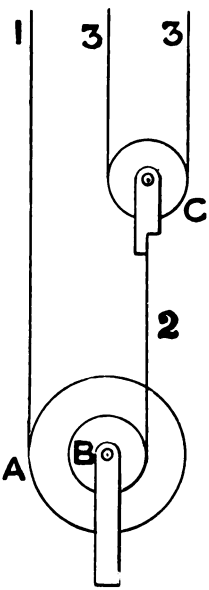

FIG. 48.

In Fig. 53 the 3-shaft motion is retained, but that for 2 shafts is replaced by one for 4 shafts (Fig. 46). Lever *b* is now divided into seven parts, and the pin placed at the third line from the heavy end.

In order to prevent stocks and bowls from giving a side pull to the healds it is usual to employ two sets, each one placed at the same distance from the extremities of the shafts; and to avoid the straps twisting between the rollers and shafts, the axes of some upper rollers are frequently at right angles to those below.

In Fig. 51 a set is shown in working position with the requisite connections to the shafts. The upper rollers are also turned to bring each strap immediately under the shaft to which it is attached.

Owing to the multiplicity of levers in some sets of stocks and bowls it is not always an easy matter to trace the movement of each roller when a shed is forming, but a little careful analysis will be sufficient to demonstrate it.

Something depends upon the character of the shedding

Digitized by Google

motion. If, for instance, a Jamieson tappet, a single lift, or a centre shed dobby is used (see p. 43), all warp is placed in one line after each passage of a shuttle, but the position

FIG. 49.

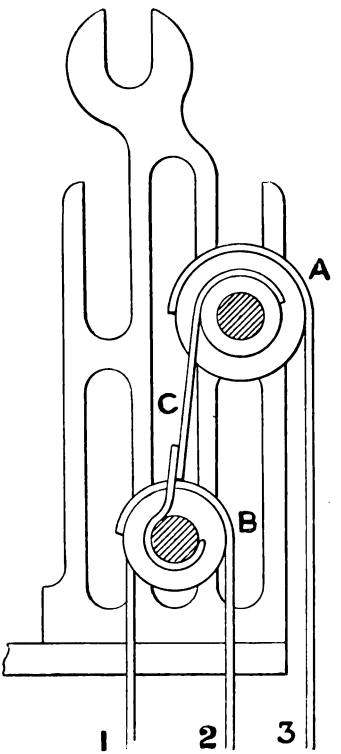

FIG. 50.

of that line varies with the number of shafts moved up or down at one time. Its height above the lowest point of a shed can be found by employing the following rule :—

$$\frac{\text{Depth of shed} \times \text{shafts lifted for one pick}}{\text{Shafts in the set.}}$$

Digitized by Google

Example.—If a shed 3″ deep is made for weaving a five-thread twill, three up and two down, the closed point will be

$$\frac{3 \times 3}{5} = \frac{9}{5} = 1{\cdot}8''$$

above the bottom shed line; but if the same size of shed

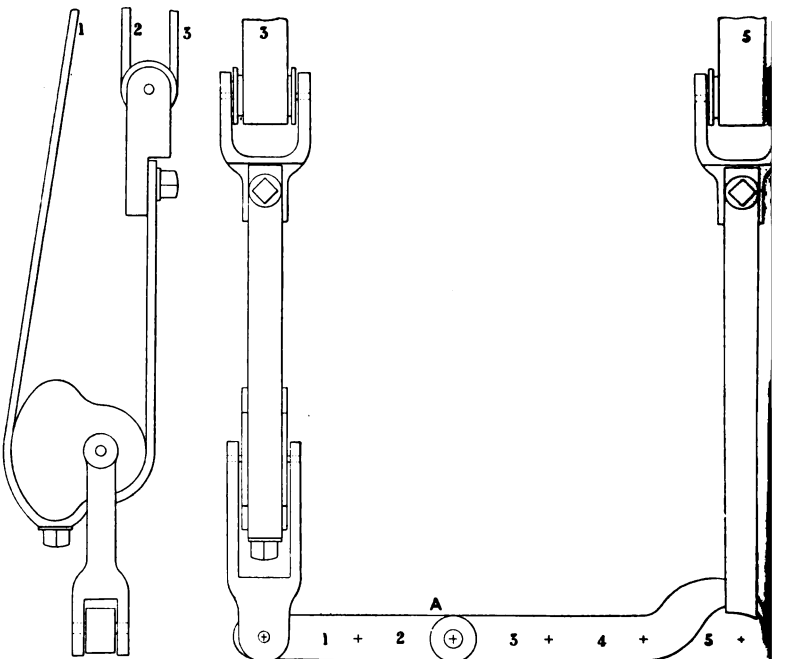

FIG. 51.

is made for a four up and one down twill pattern, it

$$= \frac{3 \times 4}{5} = \frac{12}{5} = 2{\cdot}4''$$

from the bottom. For proof refer to Fig. 54, in which *a* is the pattern, *b* three divisions ruled to represent inches

Digitized by Google

in depth of shed, each being subdivided into five parts to correspond with the number of shafts employed. Vertical divisions 1, 2, 3, 4, 5 contain respectively five dots *c*, that

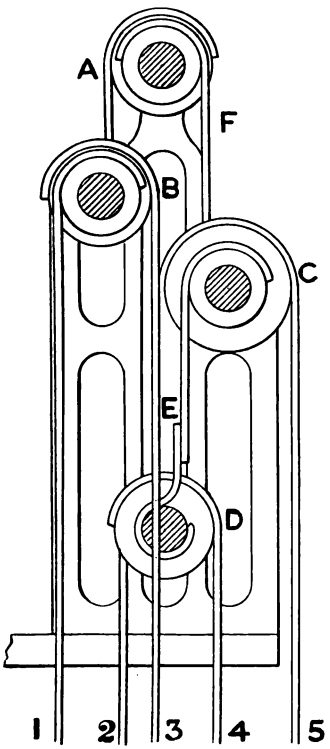

FIG. 52.

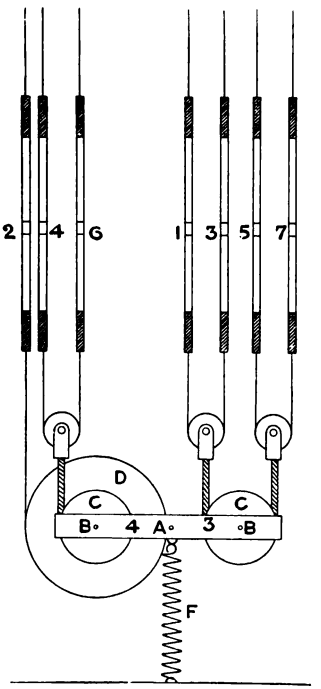

FIG. 53.

show warp level for five successive picks; *d* is the under-motion used to connect the shafts.

Assume shafts 1, 2 are lifted $\frac{6}{10}''$ $\therefore$ $\frac{6}{10}'' = 3'' - 2\frac{4}{10}''$, shafts 3, 4, 5 will sink in the proportion of $3 : 2 :: \frac{6}{10}'' : \frac{4}{10}''$ (see bottom lever *e*), $\therefore$ $\frac{6}{10} + \frac{4}{10} = 1''$, the distance below 1, 2;

Digitized by Google

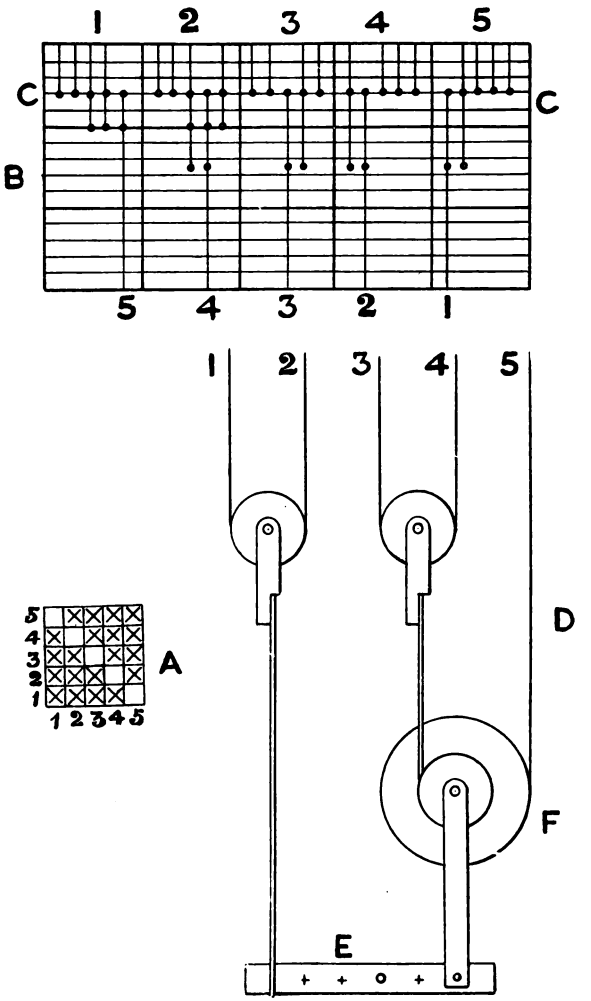

FIG. 54.

Digitized by Google

and lifting 3, 4 from that position to the level of 1, 2, will pull down 5 in proportion to the surfaces of compound rollers *f*—namely, 1 : 2 :: 1″ : 2″, ∴ when shaft 5 is on the bottom shed line, 1, 2, 3, 4 are on the top line. The movement of shafts for picks 2, 3, 4, 5 is traced on the figure, but it must be borne in mind that it is simultaneous, and not consecutive for each pick.

An open shedding motion acts somewhat differently, for all the shafts can never be at one height at the same instant. In tying them up, some are corded level with the top, others with the bottom sheds, in which positions they remain stationary until the pattern renders changes necessary. The same number of shafts rise and fall every time a shed is formed, and those remaining are locked either at the top or bottom by the shedding motion.

If the last pattern is taken to illustrate this system, we find shafts 1, 2, 3, 4 up and 5 down for the first pick; for the second, 5 goes up and 4 down 3″. Under-motion *d* shows that 3″ of strap will be unwound from large pulley *f*, and 1½″ wound upon the small one compounded with it. Shaft 3 being fixed, and the centre of roller *g* pulled down 1½″, it follows that shaft 4 will be depressed 3″—namely, 1½″ by the fall of *g*, and 1½″ by increasing the length of strap 3.

A similar movement can be traced amongst the rollers and straps when any pair of shafts are changed.

PART V

DOBBY SHEDDING

If a pattern is beyond the range of a tappet either in the number of shafts to be manipulated or in the picks to

Digitized by Google

a repeat of the pattern, and is at the same time too small to be economically produced by a Jacquard, a machine specially constructed to control shafts is employed; it is known as Dobby, Witch, Wizard, and Index in different manufacturing centres, and the number of shafts it is capable of working is frequently mentioned with the machine, as a 16-shaft, or a 40-shaft dobby.

In the immediate neighbourhood of Manchester large dobbies are not in extensive use; from 12 to 16 shafts include by far the greatest proportion of these machines, although in a few instances as many as 24 shafts are employed. In the Dhooty trade 40 jack dobbies are common, but they are used to work a mail mounting, and for all purposes can be considered to do the work of a small Jacquard. In the Worsted industry 36 jack dobbies are in everyday use, and in exceptional cases as many as 70 jacks are employed. The last-named dobbies are usually positive in action, and are therefore preferable to a Jacquard for heavy cloth, firm shedding, and general good working.

In places where patterns are often changed, a dobby is used for fabrics quite within the range of a tappet, as it offers greater facilities for producing a variety of effects than a tappet. Still it must be borne in mind that healds never work better, never last longer, or give greater satisfaction, than when actuated by a properly constructed tappet.

It is probable that the dobby dates from a time anterior to that of the Jacquard. Certainly, analogous machines were applied to the hand-loom for weaving patterns beyond the range of treadles before Jacquard's invention reached this country, hence they can scarcely be said to owe their existence to the larger machine.

As now made they are single-acting, double-acting,

Digitized by Google

negative, and positive; they form closed, centre, semi-open, and open sheds. In short, the variety is so great that it goes a long way towards proving that none are quite satisfactory, for wherever a piece of mechanism is found to be pre-eminently suitable, it soon displaces all else intended for the same purpose. In dobbies, one is too slow in action, another is only adapted for light fabrics, a third is too complicated in construction, a fourth results in excessive wear and tear, and so on.

Beginning with the single lift negative dobby, we find a framing *a* (Fig. 55) placed over the centre of the shafts, which contains a number of vertical pieces *b*, called hooks, each has two bends near its extremities—that at the top to form a hook, that at the bottom to hold a cord, or wire, to which a heald shaft is connected. The hooks rest upon a perforated board *c*, or a metal rack, known as the bottom board, and each is kept vertical by a horizontal needle *d*, furnished with two eyes *e*, *f*, formed by slotting and drilling the metal; slot *e* is slightly broader than a hook, and the latter is passed through it. Two plates *g*, *h*, are perforated to receive the forward and rear ends of *d*, and hold them in a horizontal line. Through eye *f* the lower end of a piece of steel wire *i* is passed, and its upper end is secured to a flat bar *j*, extending from end to end of the machine; *i* acts as a spring, and thrusts the end of *d* through the needle plate *g*.

A square prism *k* is supported by two horizontal rods *l*, fixed to opposite ends of the framing by bearings *m*, in which *l* slide freely. Both rods carry two fixed brackets *n*, *o*, the former being curved forks, and the latter bearings to receive the gudgeons of *k*. The prism, or cylinder *k*, is perforated on each face, so that the holes are brought exactly opposite the needle points, and are pegged to hold

Digitized by Google

the cards in position; it requires a horizontal and a rotary motion. The horizontal motion comes from two vertical rods *p*, that move freely in bearings *q*; they carry a griffe bar *r* at right angles to *p*, but inclined to hooks *b*, or better

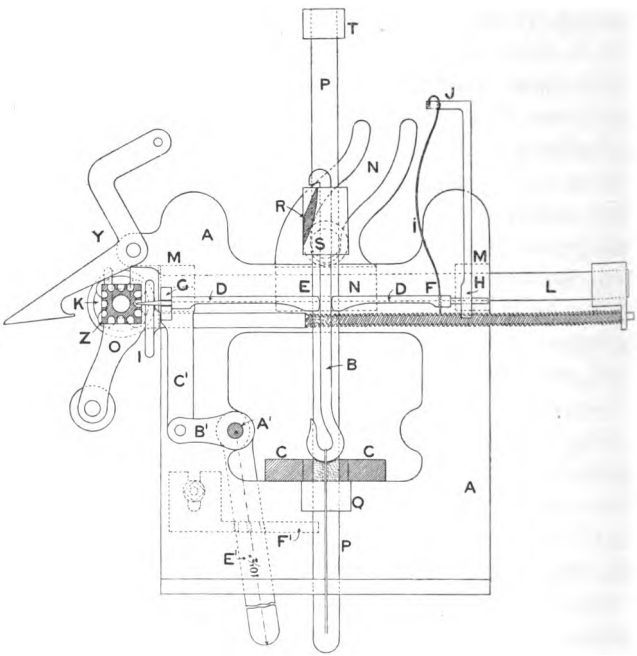

FIG. 55.

still, slightly inclined to both; also bowls *s*, which work between the prongs of fork *n*. Above *r* a cross-head *t* is keyed upon *p*, and attached by link and pins to a lever, having its fulcrum in a bracket elevated above the framing. From this lever a rod descends to a crank on the main driving shaft of the loom; hence, as the crank

Digitized by Google

rotates, the rod receives a vertical movement, and imparts a lateral reciprocating motion to *n*, and also to cylinder *k*.

The rotary motion is given by a catch *y*, that rests upon the top face of the cylinder, with its hook projecting beyond the forward edge of a lantern *z*, secured to one end of *k*, and consisting of four rounded metal projections in line with the four corners of the cylinder, so that when *k* moves out, catch *y* takes hold of a projection on *z*, and pulls it through one-fourth of a revolution. It is prevented from turning too far, and assisted to turn its proper distance, by two T-shaped hammers 1, each having a shank long enough to pass entirely through the dobby. Both shanks are partly round, partly square in section, and have spirals loosely threaded upon them to press against a cross-bar that connects sliding rods *l*, and also upon the square parts of the shanks; hence the heads of 1 continually press upon the inner face of cylinder *k*.

A chain of perforated paper cards is passed round cylinder *k* and held in position by two conical pegs in each face, which pass through holes in the cards. The cards are punched to correspond with the pattern to be woven, each hole equals a rising shaft, and each blank a sinking shaft.

The rotary motion of *k* brings the cards forward successively, and the horizontal motion allows the cylinder to turn, and also moves it into contact with the projecting points of needles *d*.

The action is as follows:—When the driving crank is on its top centre, griffe *r* is about $\frac{1}{4}''$ below the upper bend of hooks *b*, and its top edge touches the vertical line of hooks; bowls *s* are at the bottom of forks *n*; cylinder *k* is pressing a card against plate *g*, and consequently the projecting points of needles *d* are pushed back when blank places in

Digitized by Google

the cards come opposite them, for springs *i* give way. In doing which some hooks *b* are pressed out of the perpendicular by the needles, but a perforation in the card allows a needle point to enter without producing any effect on either needle or hook.

The rotation of the crank causes *r* to ascend and take with it all vertical hooks, but all inclined hooks are left. Cylinder *k* moves out, when *r* is above the level of hooks left down, far enough for catch *y* to turn it without bending the needles, a fresh card is presented, and the process repeated.

This dobby is neither more nor less than a small Jacquard, with one row of hooks and needles. It is only adapted for slow-running looms, for reasons given on p. 19. It is also defective at two additional points: first, because a horizontal griffe, with a vertical lift, cannot place all warp threads of the top shed level, and leave all those of the bottom shed on the race board, but lifts all equally; therefore, as the rear shafts must be elevated sufficiently to allow a shuttle to pass below the warp, the forward shafts move too high, and unnecessary strain results. To avoid which each shaft should have a different lift, the front one to move through the least space, and the back one through the greatest.

A simple alteration in the griffe shown in Fig. 56 has rendered the machine perfect in this respect: *a* is the griffe bar which swings freely upon a fulcrum pin *b* carried over the loom front by a bracket on the dobby. At *c* a horizontal shaft vibrates in bearings, and has two arms, *d*, *e*, the former connected to *a* by link *f*, and the latter to the driving crank by rod *g*.

It is obvious that the hook nearest the fulcrum pin will move through less space than that nearest to link *f*,

Digitized by Google

also that the lift of each from front to back gradually increases.

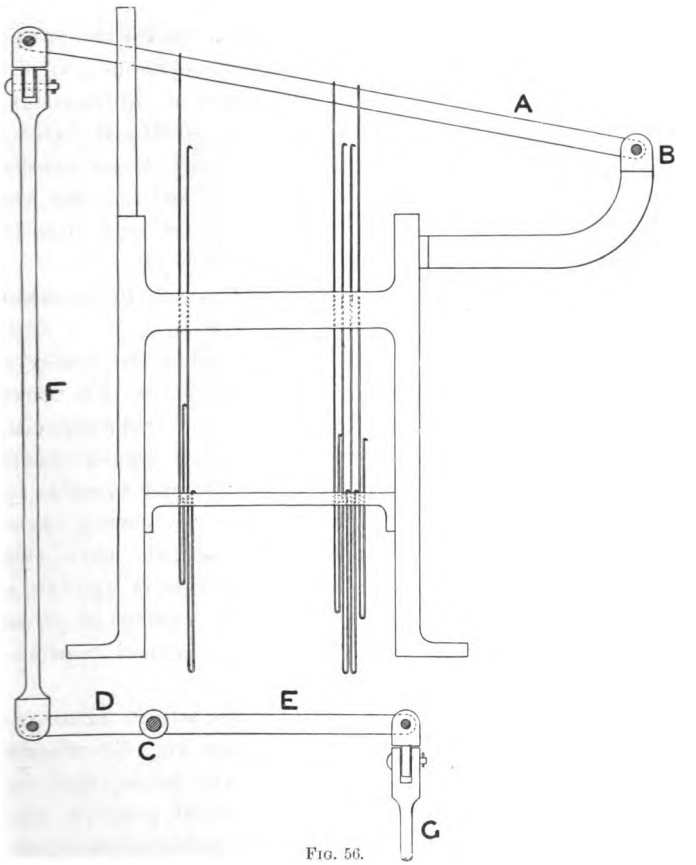

FIG. 56.

The second point relates to the horizontal traverse of the cylinder, which must be regulated to hold the needles back until the griffe is above the hooks left down; this is

Digitized by Google

done by making the bottom of the space between the prongs of forks *n* (Fig. 55) almost vertical.

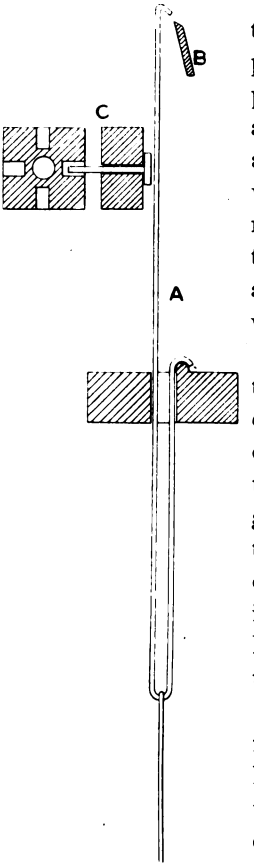

Fig. 57.

Careful consideration will show that when griffe *r* reaches the same point in its descent, cylinder *k* again presses back some of the needles, and if any of them actuate hooks already on the griffe, those hooks will be pushed off and fall the remaining distance; the tendency is to puncture cards, bend both needles and hooks, and generally to increase wear and tear.

Of the parts added to remedy the above-named defect, the most effective is separate driving for the cylinder—namely, a tappet fixed to the crank shaft, and shaped to give the proper movement, acts through levers and rods upon the cylinder, but the cost of applying it and the increased number of parts have prevented its general application.

A fairly satisfactory arrangement is shown in Fig. 57, where hooks *a* are turned round, and in their normal vertical position are out of reach of griffe *b*; they are pushed upon *b* by blanks in the cards acting on short needles *c*, each furnished with a disc instead of an eye.

Another contrivance is shown at Fig. 58, in which

Digitized by Google

needle *a* has three eyes, the first large enough to receive spring *b*, the second one considerably exceeds the dimen-

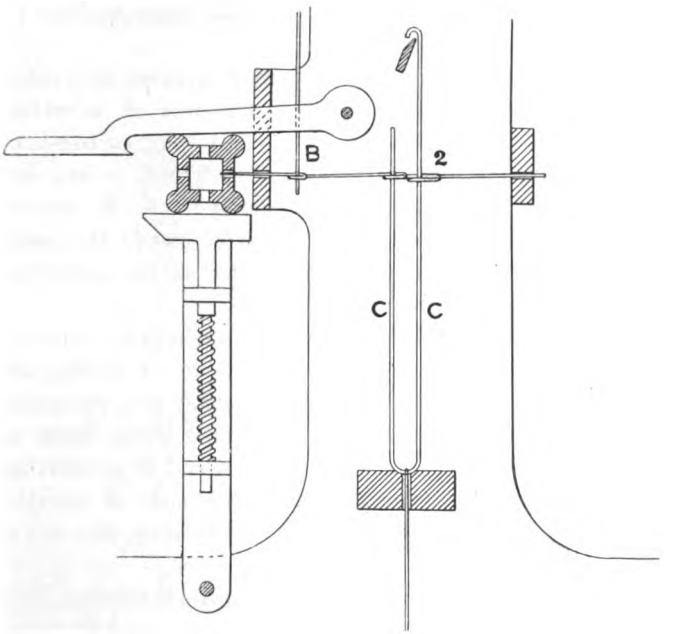

Fig. 58.

sions of hook *c* and takes its long leg, whilst the third is only large enough to take its short leg.

Assuming hook *c* is on the griffe and a change is necessary, a card will press back the point of needle *a* without pushing *c* off the griffe, owing to the size of eye 2,

Digitized by Google

but the space between the long and short legs of *c* is increased, and the natural springy nature of the wire carries the long leg off the griffe immediately the latter reaches its lowest point.

Cards containing two or three rows of holes are often met with on dobbies having only one row of needles; this enables a manufacturer to produce long, striped, or bordered fabrics from a few cards, each row being cut to weave a different pattern. The cylinder is, of course, drilled to correspond with the number of rows in the card, and the dobby is said to be double-decked for two, and three-decked for three rows.

There are two systems in use for bringing the different rows of holes in action — one consists in elevating the needle plate, and the other in elevating the cylinder. The latter is by far the best, for needles never work so well as when at right angles to hooks, and it is obvious that elevating or depressing the forward ends of needles and leaving their rear ends stationary, will cause one set of wires to be inclined to the other.

In Fig. 55 a plan for lifting a needle plate is shown : *a'* is a shaft that extends the length of the dobby, on which are two arms *b'*, but the drawing only shows one, supporting bars *c'* and needle plate *g*. A handle *e'* and a notched plate *f'* are employed to move *g* up or down.

Assuming a card to have three rows of holes, the needles are opposite the middle row when handle *e'* is in the centre notch of *f'*. If moved to the right notch the top row will be used, and if moved to the left notch the bottom row will be acting upon the needles.

In Fig. 59 it will be noticed that similar parts to those used in the last figure are attached to the cylinder instead of the needle plate : *a* is the shaft, *b* an arm, *c* the cylinder

Digitized by Google

bar, *d* the cylinder, *e* the setting handle, and *f* the retaining plate.

The cylinder motion of a dobby has been spoken of as

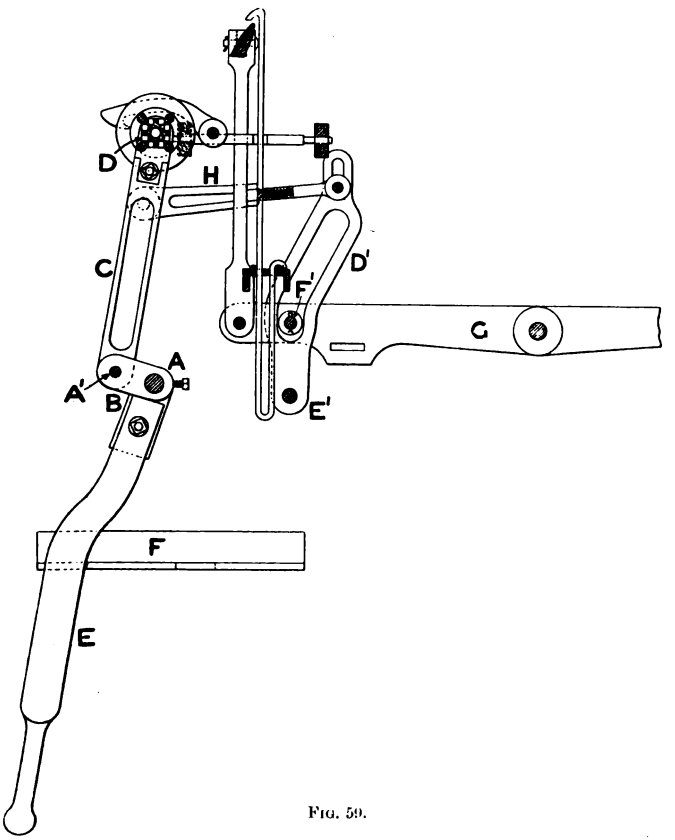

Fig. 59.

horizontal, but some cylinders merely swing, whilst others only rotate.

The parts of a swinging cylinder are given in Fig. 59. A shaft, *a'*, is placed near the foot of the machine and carries

Digitized by Google

two uprights *c*, into the upper ends of which the cylinder *d* and its bearings are secured. An arm *d'*, with a long curved slot, swings freely upon pin *e'* in the lower part of the machine framing as bowl *f'*, fitted upon lifting lever *g*, moves up and down the slot. A connecting rod *h* couples *d'* and *c* and conveys the motion of the former to the latter.

Other things being equal, a swinging motion is not quite so good as a horizontal one, because it moves in the arc of a circle and causes the upper parts of the holes to come opposite the needles when contact is first made between card and needles; but as the cylinder arm moves into a vertical position the needle points occupy the centre of the holes, whereas a horizontal motion constantly holds the hole centres opposite the needle points.

A rotary cylinder motion invariably requires lags instead of cards, and a series of springs *a* (Fig. 60) (in the drawing given they resemble tuning-forks), the handle of each is screwed to rail *b*, and one prong rests against needle *c*, the other against lag *d*. When cylinder *e* is turned, a peg presses the prongs of *a* together, and hook *f* is moved in range of griffe *g*. The forks when in position form an almost continuous line across the machine and give comparatively large surfaces for the pegs to act on; this is essential, as it would be next to impossible to ensure perfect working without them, for a peg would slip over, under, or at one side of its needle.

A modification of the last method is shown in Fig. 61. Flat springs $\frac{1}{4}''$ wide are screwed upon rail *b* and slightly bent outward by rod *c*. Needle *d* is riveted to spring *a*, so a peg in *e* presses back *a* and *d* and forces hook *f* over griffe *g*.

Both methods are moderately satisfactory, but of the two the last described is preferable.

Digitized by Google

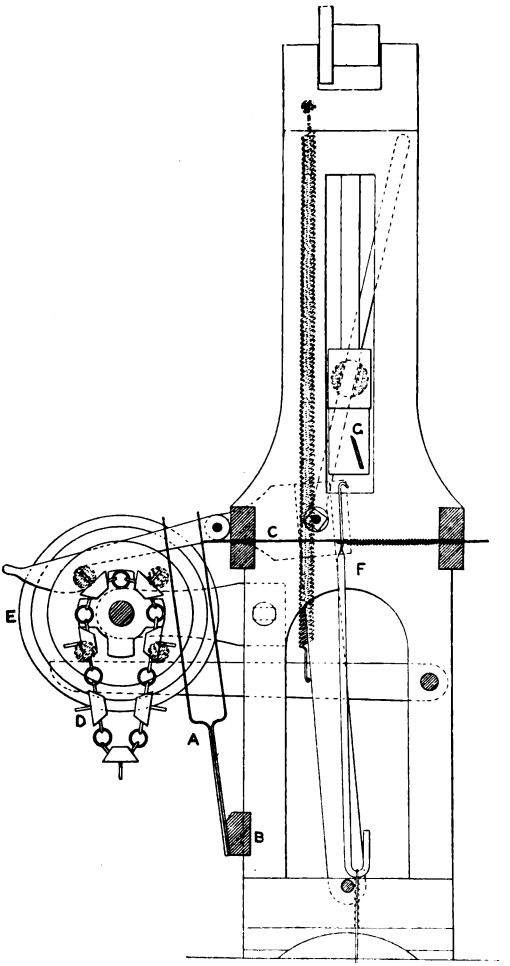

FIG. 60.

Digitized by Google

As a fresh set of cards is required for each pattern, they form the most expensive item in connection with dobbies, and it is not to be wondered at that machinists and

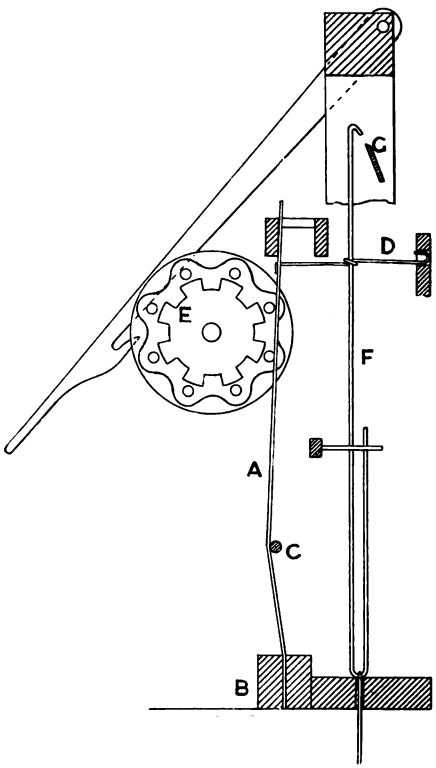

FIG. 61.

manufacturers have devoted considerable time to the problem of reducing the cost of using them.

A continuous band of perforated paper, also of wire gauze, and canvas cloth, having some of the perforations stopped

Digitized by Google

up with varnish, or other material capable of resisting the tendency of needles to break off, or puncture it, have been tried with little or no success ; but lags, consisting of pieces of wood (each drilled so that its holes coincide with the needles), are formed into a chain by driving staples into their sides near each end, and linking all together by rings ; then wooden pegs are pressed into some of the holes to serve as risers or sinkers, and lags furnish manufacturers

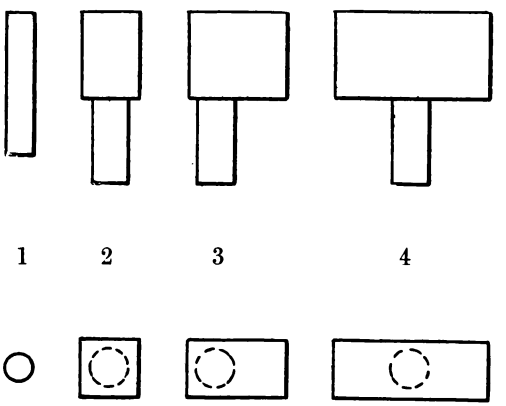

FIG. 62.

with a successful rival to cards, as pegs can be pulled out and readjusted for a new pattern.

Lags are altered in form to suit the make of dobby they are intended to be used with. Some have single, whilst others have a double row of holes. Where the latter occur, holes forming the second row are exactly midway between those of the first row, hence the pegs when inserted have a zigzag appearance and allow each lag to govern two sheds instead of one, thereby reducing the length of lattice required for a given pattern. Pegs for all double and many single rowed lags are cylindrical in form,

Digitized by Google

and usually of wood, about $\frac{3}{4}''$ long by $\frac{1}{8}''$ in diameter, but as such thin wood is liable to break off when working, metal has been tried as a substitute with, however, only partial success (see Fig. 62, No. 1). Other pegs for single pick lags have a round shank and an oblong head; needles are then dispensed with by causing the pegs to act direct upon the hooks so as to push them on or off the griffe; in the former case a peg lifts a shaft, in the latter it depresses

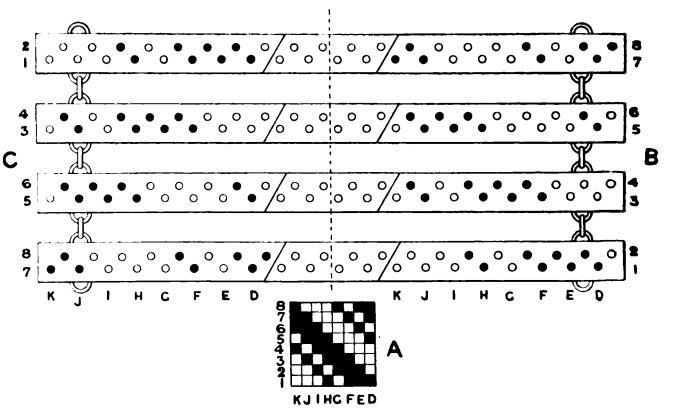

FIG. 63.

one. No. 2 shows a peg for a single hook, 3 operates two, and 4 operates three hooks. Compound pegs are employed to reduce the time taken to prepare a set of lags, a single peg is approximately $\frac{1}{3}''$ across the head and a three-hook peg 1″, all are about $\frac{5}{16}''$ thick.

Dobbies are known as right and left handed, the distinction arises from the position of the driving rod or rods. If, when the weaver faces the fabric, they pass down at the left-hand end of the loom, the machine is said to be right-handed, but when the rods are at the right-hand end the

Digitized by Google

machine is left-handed. This makes a difference in pegging a pattern, as will be seen by referring to Fig. 63, in which *a* is the design, *b* lags, with the solid circles representing pegs for a right-hand machine, and *c* similar lags for a left-hand machine. The letters refer to shafts, and the numbers to picks in all cases.

Centre Shed Dobby

The centre shed dobby was introduced to expedite weaving; and is now chiefly used in those branches of the cotton industry where the nature of the fabric precludes high speeds, or where closed shedding is essential, as in gauzes; and for such work it is well adapted, but at a higher speed than 160-170 picks per minute it ceases to be reliable, for it is limited by the striking capacity of the cylinder, and cards are liable to be thrown off, to become punctured by their rapid strokes against the needles, and the short time allowed for selecting rising and falling hooks; these all tend to defective shedding.

The essential parts of a centre shed dobby are (Fig. 64) a griffe *a*, of the usual form, centred at *a'*, and grid *b* for the hooks to rest upon, swinging upon pin *b'*; both levers are operated, so that one is forced up and the other pushed down simultaneously in the following manner:— A connecting rod *h* is vibrated by a crank on the top shaft of the loom; it is attached to lever *d* and causes it to rock on centre *i*. Rod *c* couples *d* to *a* and imparts a similar movement to the latter. Rod *e* connects *d* to one end of lever *f*, which swings freely on a stud bolted in the framing, and carries at its opposite end another rod, *g*, that passes down to, and is pinned upon rack *b*. It is obvious that the motion of *d* is reversed by *f*, and therefore *b*

Digitized by Google

descends as *a* ascends, with the result that all hooks taken up by *a* lift shafts to form the top shed, whilst those missed by *a* fall with *b* to the bottom shed. The up and down movements of shafts being simultaneous, the time occupied in making changes is only half that required to complete them when a single lift machine is used. In a loom lever *d* is at right angles to *a*, but in the drawing, parts *d*, *e*, *f*, *g*, *h* have been opened out from dotted line *k* to show the working clearly.

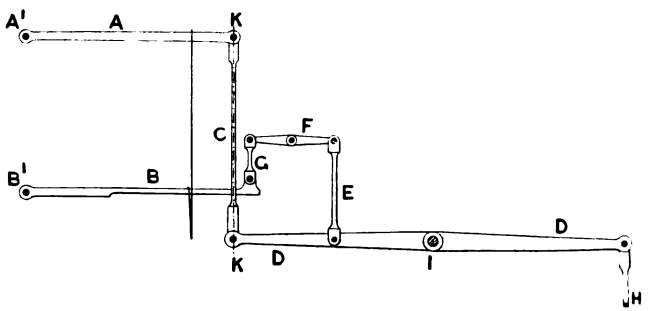

FIG. 64.

The card cylinder is frequently "decked" and swings, as in Fig. 59.

Ordinary needles are employed, but springs are rendered superfluous by the form of the hook (see Fig. 64) and the method of supporting it. The bottom bend is hooked upon one edge of the grid, and the weight of the heald shaft constantly tends to throw the top bend in range of the griffe.

DOUBLE LIFT DOBBIES

Double lift dobbies possess advantages over those forming a centre shed in respect to steady working at high

Digitized by Google

speeds, because a card, or lag barrel, only actuates its own set of hooks once for two revolutions of the crank shaft, and the time for selecting a fresh series of hooks is at least twice as long in a double lift; hence cards are not perforated by needles, nor pegs broken to the same extent, and more certainty results from increased time to make changes. Again a shaft can remain stationary at the bottom for two or more picks whenever the pattern permits it, instead of rising to the centre and falling again for the next pick; this is of great advantage in weaving most fabrics, except gauzes, as the warp is kept steadier and less strain is put upon it; but for the last-named class of fabrics a double lift possesses fewer advantages; in short, its only advantage is a somewhat higher speed, to obtain which an open, or semi-open shed must be converted into a closed one by the application of parts known as "shakers" that do not belong to the dobby.

The Blackburn Dobby

It is not an easy task to award honours to inventors of a machine known as the Blackburn Dobby, partly because it has been slowly developed, partly because it does not possess as many distinctive features as other machines of the same class. To a large extent it resembles a double lift, double cylinder Jacquard, but it has been modified to meet the special requirements of a dobby. It frequently contains as many as 80 hooks, and is then capable of actuating 40 double jacks; but the parts are so light and flimsy in construction that they are incapable of moving shafts even when moderately weighted.

Its central feature consists of hooks placed in two lines which are operated by pegs without the aid of needles or

Digitized by Google

other intermediary parts. The machine is placed near one end of a loom so that ordinary tappets may be fixed at the centre of the bottom shaft to govern healds. An extra pair of tappets are secured nearer one end of the same shaft and have two treadles resting upon them, to which long connecting rods are attached by studs; after passing through the warp they are made fast to the rear ends of two griffe bars that are fulcrumed over the loom front when a varying lift is required; but in the case of a straight lift the griffe treadles are below their tappets, the connecting rods are hooked upon treadle studs, and finally screwed into adjusting pieces pendent from the griffes. Both griffes are then connected to straps bolted upon the surfaces of two pulleys, the latter are fastened at opposite ends of a short horizontal shaft extending across the dobby and parallel with the hooks; hence if one rod is depressed, shaft and pulleys oscillate to give equal opposite movements to the griffes. Lag barrels are separately driven from a crank at one end of the tappet shaft, on which a connecting rod is fitted for the purpose of rocking a lever and thus giving a sliding motion to the barrels. Rotation is derived from pulling pawls that rest loosely upon a ratchet, keyed upon one of the barrel shafts; therefore, as they are rocked by the crank, the pawls pull one barrel through $\frac{1}{8}$ of a revolution, and the other is moved an equal distance by the gearing of two spur wheels that are fitted upon the forward ends of barrel shafts.

Two tappets, one crank, and three connecting rods are employed to convey motion to all parts of this dobby, and as two of the latter go through the warp, it is by no means an ideal arrangement. If the parts are connected, as in the accompanying figures, a single crank

Digitized by Google

and rod will suffice; all driving parts are outside the loom framing, and either a straight, or an unequal lift can be given.

In Fig. 65, *a* is a rod connecting a crank on the bottom loom shaft with lever *b* by means of a universal joint; *b* swings on centre *c* and carries a toothed segment *d* into contact with the teeth of wheel *e*. One end of a rod *f* is pinned upon *d* at a point *g*, and the other end is secured to griffe *h*. A similar segment *d'* gears with the

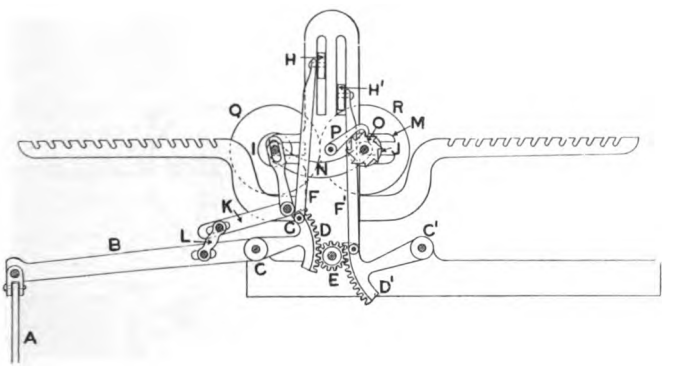

FIG. 65.

opposite side of *e*; it vibrates on pin *c'*, and is connected to griffe *h'* by rod *f'*; therefore, as *b* ascends, and *h* descends, segment *d'*, which has a simultaneous but diametrically opposed movement to *d*, causes *h'* to rise when *h* falls; both meet in the middle and form a semi-open shed precisely similar to that of a double-acting Jacquard.

Lag barrels *i*, *j*, are coupled by a curved link *n*, and move in sliding bearings *m*. Motion is derived from *b* and conveyed by lever *k* and link *l*; the latter fits upon two adjusting studs—one in *b*, the other in *k*. A ratchet wheel *o*, with eight teeth, is keyed upon the rear end of the shaft

Digitized by Google

of barrel *j*, and pawl *p*, centred upon a stud in the framing, rests upon *o*. Two equal wheels *q*, *r*, are screwed upon the forward ends of *i*, *j*, to connect and turn both inwards at the same instant. They are kept steady by a hammer of the usual type—namely, a horizontal bar of metal *s* (Fig. 66), bent at two points to engage with the lower notches of two octagonal star wheels *t*, that adjoin wheels *q*, *r*. Bar *s* is retained in contact with *t*, *t* by a spiral *u*, threaded upon

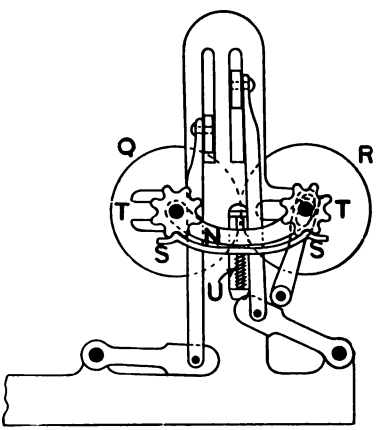

FIG. 66.

the shank of *s*; its lower end impinges against a holding bracket, and its upper end against *s*.

The long legs of wire hooks *v* (Fig. 67) are 20″ to 21″, and the short ones 14″ to 15″ long; they are placed, back to back, in two parallel rows. All are retained in an upright position by means of three grids *w*, *w'*, *w''*, assisted by rest *x*, upon which the short legs of *v* hang. When unmoved by pegs hooks are vertical and will be caught by the rising and falling griffes *h*, *h'*.

The lattice *z* is equally divided—one half consists of

Digitized by Google

odd picks, the other of even ones; they are passed round, and revolve with barrels *i*, *j*. Pegs *y* exert a direct pressure upon *v* to force them back from griffes *h*, *h'*; hence a peg equals a hook left down, and an empty hole in lag *z* will cause a hook to be lifted.

Hooks that face each other are attached in pairs to jacks 1, either by nipples on the jacks, or by sliding a jack through the loops of two hooks. Jacks are $\frac{3}{4}''$ to $1''$ deep by $\frac{1}{16}''$ thick, and are placed so closely together that 40 only

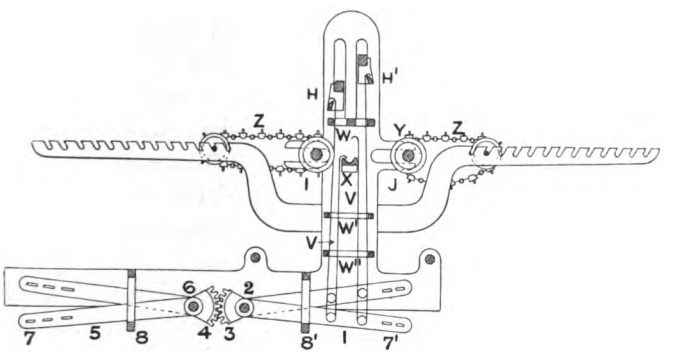

FIG. 67.

occupy a space of 13″, each is fulcrumed at 2, and provided with a toothed segment 3, to gear with a similar segment 4, on a second set of jacks 5. The latter all move on fulcrum pin 6, and connection is made with the harness at points 7, 7'. When a hook is lifted, jacks 1, 5, move through a similar upward space; and grids 8, 8', prevent side movement in 1, 5.

This dobby is chiefly employed to ornament Dhootys—namely, plain fabrics upon which extra coloured threads form a loosely floating figure near the selvages. In such an event tappets and heald shafts weave the fabric, the

Digitized by Google

dobby only contributes the figure, and this is obtained by the aid of two Jacquard harnesses, seldom exceeding 4″ in length, which are secured near opposite edges of the piece and kept in tension by elastic cords.

Keighley Dobby

In 1867 Messrs. Hattersley and Smith patented a dobby that proved a great success and was without its equal for most shaft work; but extensive use soon brought to light certain defects which, although relating more to detail than to principle, were sources of annoyance, the most noticeable being excessive wear and tear, slipping of needle collars, difficulty of getting at parts requiring repair, and want of solidity. Some of these defects were removed before the original patent rights expired, others have been rectified since the machine became public property, when all loom-makers commenced its manufacture.

During the last few years it has been modified in many ways to meet special requirements, but for general use one of the best and simplest machines of this type is made by Ward Brothers. A sectional drawing of which is given in Fig. 68, where it will be noticed that hooks *a*, *b*, are placed horizontally, and are jointed at one end to a rocking bar *c*, which is in turn supported at point *d′* by the upper part of a front crank lever *d*; the latter moves on a fulcrum pin at *e* and is connected to a heald shaft at *f*. Slot *g* concentric with *e* receives a pin that assists to hold *d* in position.

Hook *a* is supported in a more or less horizontal position by a needle *h*, circular in section, resting upon the straight and lighter end of a lever *i′*, fulcrumed at *j*; but hook *b* is supported by a lever *i*, similar to *i′*, except that it is

Digitized by Google

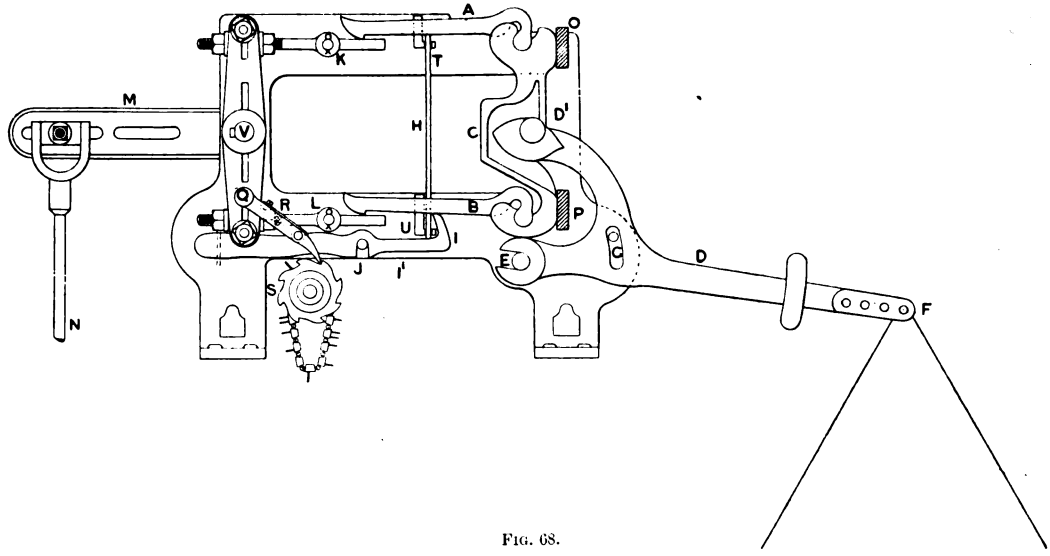

FIG. 68.

Digitized by Google

prolonged and bent almost at right angles until its highest point touches the under side of *b*. Needles *h* are kept in position by passing them through holes in the flanges of grids *t*, *u*; hooks *a*, *b*, are prevented from assuming other than a parallel position by the grids lettered above, and levers *i*, *i'*, are retained by similar means.

Immediately below the heavy ends of *i*, *i'*, an octagonal lag barrel *s* is free to rotate; the pitch of the lags being equal to that of the levers, it follows that a peg will elevate a lever, and an empty hole will leave one stationary.

Elevating a lever at the point where lags act causes the inner end to fall and takes the support of a hook away, hence the outer end of *a* or *b* will fall also until it drops upon a griffe or draw knife *k* or *l*; both slide in horizontal slots in the framing, and are connected by adjustable rods to a three-armed lever *m*, which is oscillated on its centre *v* by a crank on the bottom shaft of the loom and a lifting rod *n*.

As the crank revolves, knives *k*, *l*, slide horizontally to and fro in opposite directions, and the fall of hook *a* or *b* is timed to take place when *k*, *l*, are at the extremities of their oscillations; the latch on *a* or *b* will then be slightly in advance of the edge of its drawing knife. Assuming *k* begins to move out it will take hook *a* with it, pull the top of bar *c* from stop *o*, press its lower end against stop *p* and draw *d'* forward, thus elevating *f* and the heald shaft, to which it is attached.

The lags being double-rowed, one line of pegs acts on levers *i*, the other on levers *i'* simultaneously, and they, together with barrel *s*, remain stationary for two picks; after which it becomes necessary to turn *s* $\frac{1}{8}$ of a revolution to carry the next lag beneath levers *i*, *i'*. This is accomplished by a jointed pawl *r*, hinged upon pin *q* in the lower arm of lever *m*, pushing against the teeth of a ratchet

Digitized by Google

wheel upon the shaft of barrel *s* as that arm moves in. A flat spring secured to the upper part of *r* extends beyond the joint, and exerts sufficient force to turn *s* under ordinary conditions, but in case anything goes wrong with the lattice, pawl *r* bends at the joint without moving the barrel. Another flat spring bolted to the framing presses upon the top of an eight-sided star wheel, which is set-screwed upon the end of the barrel shaft opposite to that holding the ratchet, for the purpose of keeping the lags steady when not in motion.

Each heald shaft requires one front crank lever *d*, one rocking-bar *c*, two hooks *a* and *b*, one needle *h*, two levers *i* and *i'*, and obviously pegs, or holes in the lags for each. The machine is placed on one side of the loom, so that point *f* on lever *d* shall be immediately above the shaft centre. In the drawing given a slight lateral movement accompanies each vertical one, but several modifications are made which give a true vertical lift.

It will be seen that an open shed is formed if it is assumed that a shaft is to be elevated for two or more picks in succession, and that if knife *k* is at the outer end of its slot, with hook *a* drawn forward, knife *l* will be at the inner end of the other, with hook *b* in position for drawing. Now, as the inward movement of *k* corresponds with the outward movement of *l*, it follows that centre *d'*, and therefore the heald shaft, will remain stationary, except in so far as changing the position of *c* from an inclined to a vertical position will alter it, and also the movement of *k*, *l*, which is in excess of that of *a*, *b*, to allow time and freedom for changes to be made; but these causes combined seldom give a downward movement to a shaft exceeding $\frac{1}{4}''$ to $\frac{3}{8}''$.

Digitized by Google

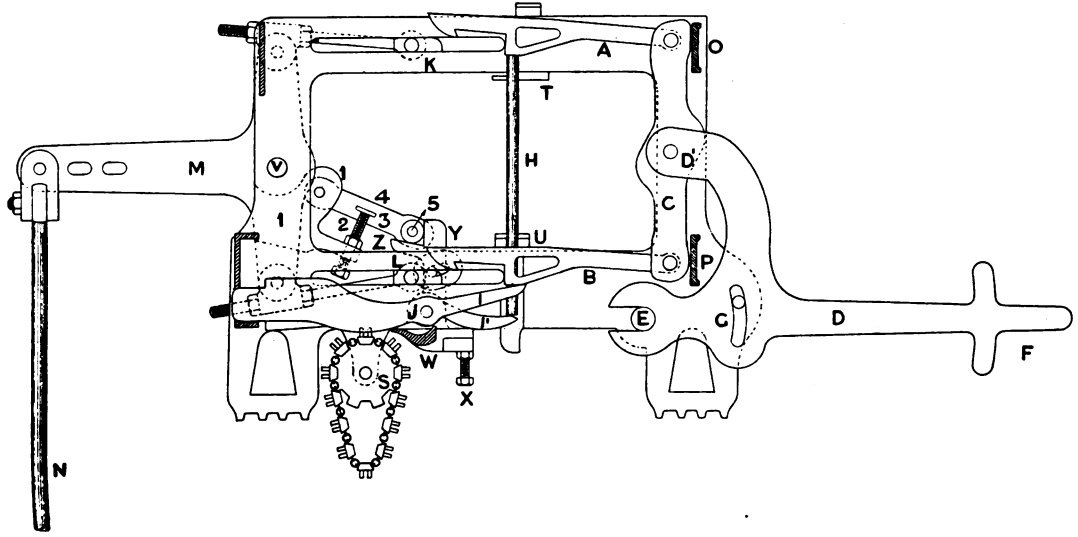

Fig. 69.

Digitized by Google

Butterworth and Dickenson's Modification

Fig. 69 is a drawing of a dobby made by Messrs. Butterworth and Dickenson. In it all parts similar to Ward's are marked with the same letters. Its special feature is found in an arrangement by which the weight of levers *i*, *i'*, is removed during the rotation of barrel *s*. This, it is believed, prevents pegs wearing at the top and breaking off short.

A swivelling bar, *w*, extends across the machine, with its forward edge touching the under side of all depressed levers *i*, *i'*. A regulating screw *x*, after passing through *w*, impinges against the framing, and an upright bracket *y*, with a short horizontal arm *z*, is also bolted upon *w*. A setting piece on *y*, rising above *z*, governs the vibrating motion of all.

Plate 1 is bolted upon the lower arm of lever *m*. It carries an adjusting screw 2, against a projection 3, on a swinging arm 4, centred in plate 1. At the forward end of 4, a bowl 5, fitting loosely upon a stud, rests on *z*, and against *y*, until the rocking of *m* has caused screw 2 to lift arm 4, and bowl 5, out of reach of *y*, *z*, by which time barrel *s* has completed its movement, and any further rocking of *m* will not affect *w*. In the meantime arm 4, in moving forward, pushed back *y*, elevated the forward end of *w*, and the rear ends of levers *i*, *i'*.

The Burnley Dobby

Messrs. Lupton and Place introduced a dobby which they believe to be simpler in construction, more substantial, less costly, and capable of working at higher speeds than other dobbies in the market.

Digitized by Google

The framework is triangular in shape, and supports at its apex shaft *a* (Fig. 70), that carries two levers *b*, into which fulcrum pins *c*, *d*, are secured, and from *c*, *d*, a series of cast-iron arms *e*, *f*, depend.

All the above-named parts are moved from the bottom shaft of the loom by a crank and connecting rod. Arms *e*, *f*, are alternately lifted and depressed, to give a rising and

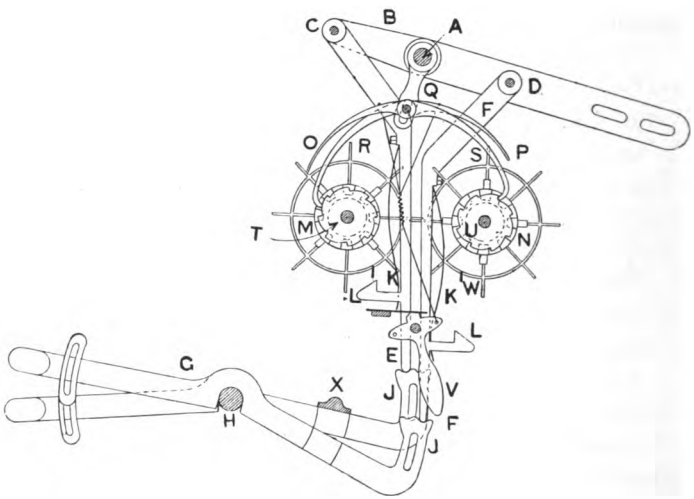

FIG. 70.

falling motion to the heald shafts through jack levers *g*. These are fulcrumed at *h*, connected by cords to the shafts, and bent almost at right angles to place the notched end of *j* in line with *e*, *f*.

Pendent arms *e*, *f*, serve, instead of draw hooks, to elevate a shaft. This they do whenever a lower, and normally free, end is pushed back by a peg over one of the notches in *j*. Then, as the arms are carried down by the

Digitized by Google

oscillation of the framing in which they are fixed, the bent end of a jack lever falls, and the straight end carries a shaft up with it.

To prevent the pegs from breaking, a flat spring *k* is secured to the face of each hanging lever *e*, *f*, and is allowed to project about $\frac{3}{4}''$ in advance of it. The lower end of *k* is then passed through a hole in catch *l*. Pegs operate against the springs, so that in case *e* or *f* sticks the spring gives way, but it is strong enough to press a lever back, assuming the latter to be free to move.

A lattice is made in two parts; all odd picks from the design form one chain, and all even picks the other. They are passed round separate octagonal barrels *m*, *n*, which have an intermittent rotary motion imparted by catches *o*, *p*, both centred upon an arm *q*, keyed to top shaft *a*. Consequently *o*, *p*, *q*, partake of the rocking of *a*, and as *o*, *p*, act upon ratchet wheels on the shafts of *m*, *n*, the barrels are turned alternately. Both are geared by spur wheels containing eight coarsely-pitched teeth.

A reversing motion is applied to the dobby to assist a weaver to find the proper starting-place after unweaving, or after weft has broken. Two additional catches *r*, *s*, depend from the same stud as *o*, *p*; they are hooked to pull, instead of being straight, to push a second pair of inverted ratchet wheels *t*, *u*. Both pairs of catches are connected by a spring and wire to handle *v* to lift one pair out when the other pair are dropped in gear. By moving handle *v* to the left, pushing catches *o*, *p*, turn barrels *m*, *n*, in the ordinary working direction, and by moving it to the right, pulling catches fall into contact with ratchets *t*, *u*. Then if the loom is started without weft, the barrels are reversed until the pick is found.

Pendent arms *e*, *f*, fall from jack levers *g*, by gravity,

Digitized by Google

and are liable to rebound into the notches on *g* if a loom is run at a high speed, to prevent which the makers have added several parts, but so far have only partially succeeded in their aim. One contrivance consists of a thin bar of steel *w*, supported in slotted brackets bolted to the side framing, for the purpose of causing catch *l* to pass on the outside of and carry up *w* for a short distance at the instant when the fear of rebounding is greatest. Another plan requires additional parts for each jack lever. This of course tends to vitiate the claim made for the dobby of containing fewer parts than any other in the market.

A cross-bar *x* checks the upward movement of the jack levers, and can be made to slide near to, or farther from, the centre of the jack levers, to regulate the depth of shed, but the lift of all the shafts is equal.

The chief merits of the machine are that the parts are easily detachable, and of cast iron, so applied that all resist a strain of compression, instead of, as in most similar machines, a tensile strain.

Positive Closed Shed Dobby

Other things being equal, a positive shedding motion is undoubtedly the best type to obtain, but it is illogical to add positive parts to any loom that will not permit the full capacity of those parts to be utilised. Such, for instance, as using a positive dobby, with a cone pick check loom, where the power to work both loom and dobby backwards together is neutralised by the picking motion throwing all the shuttles into the shed, and probably by the box chain continuing to turn forward; and yet there are many such looms at work. The defect is, however, more in the picking and box motions than in the dobby.

Digitized by Google

In one make of positive dobby a spur wheel *a* (Fig. 71) is set-screwed upon the bottom shaft to gear with stud wheel *b*, which is compounded with bevel *c*. Both turn loosely

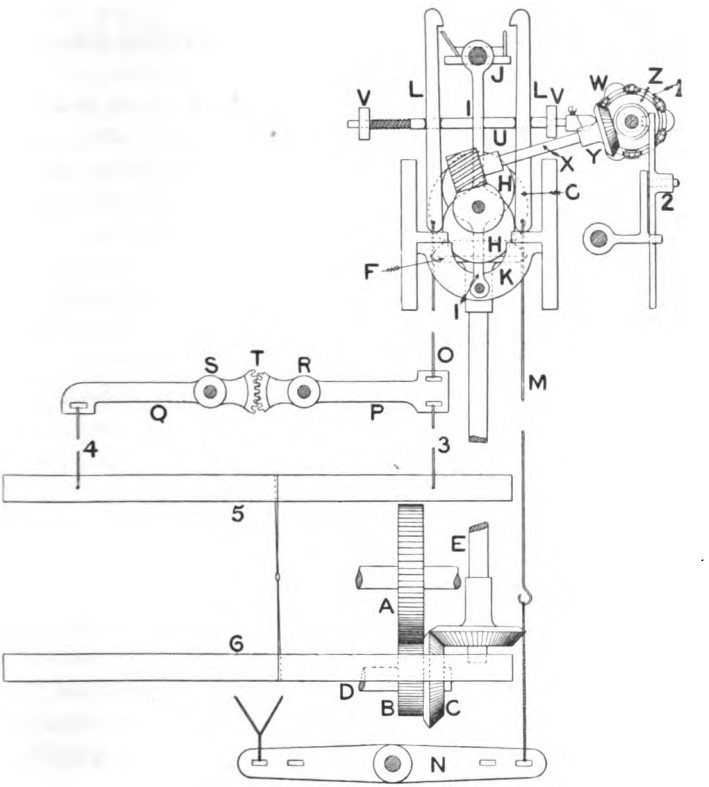

FIG. 71.

upon a stud *d*, fixed in the inner cross rail. Bevel *c* takes into a similar wheel near the base of an upright shaft *e*, and a third wheel *f*, near the top of *e*, engages with bevel *g* on the dobby shaft. This shaft carries two pairs of

Digitized by Google

eccentrics *h*, each pair coupled to place the full part of one at the top when the other is at the bottom. A metal strap and rod *i* go up from both pairs to the griffe *j*, and corresponding parts are connected to the bottom bar *k*. Hence, as the eccentrics turn, *j* moves up when *k* moves down, and *vice versâ*.

Hooks *l* are oblong in section, about $\frac{7}{8}''$ deep, and $\frac{1}{4}''$ wide. They are filed at one point to form a catch, and placed to rest upon *k* in two lines, with the catches facing each other, so that the front line when vertical miss a bar in griffe *j*, and the back line are over a second bar of *j*. The front row pull heald shafts down, and the back row lift them as the griffe acts. This is done by the methods of attachment. From every hook in the front row a rod *m* passes down to a straight lever *n*, which swings on its centre, and has a cord tied to its inner end, and also to a bottom shaft 6; whilst from every hook in the back row a rod *o* is taken to levers *p*, *q*, fulcrumed at *r*, *s*, and connected by toothed segments at *t*. Other cords 3, 4, pass to a top shaft 5. It is thus obvious that lever *n* reverses the motion of a hook *l*, and sinks a shaft, but levers *p*, *q*, simply provide a means of lifting the shafts straight.

Needles *u* are almost square in section inside the machine framing, but they are rounded at each end to work in the holes of needle plates *v*. They are slotted at two points to receive hooks *l*, and have a semicircular sheath set-screwed on each needle for lags *w* to operate. The latter are made entirely of iron, and the pegs are rounded on the top and so disposed that consecutive needles are moved by alternate pegs for any length of time, but the disused set can be made to work instantly by pushing them in range of the needles, and, by so doing, a new pattern is obtained.

Digitized by Google

An inclined shaft x is driven from the dobby shaft by a double worm gearing into a worm wheel; x also carries a bevel y to engage with bevel z on the shaft of cylinder 1, and the train imparts a continuous rotary motion to 1. Wheel z is loosely fitted in a key way on the cylinder shaft to permit of a lateral movement in w, 1, and thus shift the other set of pegs opposite needles u; this is done by altering the position of lever 2 that enters a ring groove in the shaft of 1.

Positive Open-shed Dobby

The Knowles' dobby, as made by Messrs. Hutchinson and Hollingworth, has received more attention than any dobby introduced in recent years. It is original in construction, and positive in action; it forms an open shed; it gives a straight lift to the shafts, and it governs shedding, picking, and shuttle boxes; it also contains a simple levelling apparatus for placing all the warp in one line before drawing in broken threads; and all the principal parts of the loom can be worked backwards by simply turning a handle without setting the loom in motion.

The mechanism is driven from the crank shaft by a pinion a (Fig. 72) gearing with stud wheel b, which is compounded with bevel c, and the latter drives a bevel d, attached to an upright shaft e outside the end framing. Wheel d forms part of a clutch box, used for separating the driving when it is desirable to move the slay without disturbing other parts, or when the dobby is to be turned back. The clutch is opened and closed by moving a lever that elevates and depresses the top part. It is composed of three sections, of which the upper f and lower d are loose upon e. Hoop g' is fastened by a set-screw to the

Digitized by Google

upright shaft, and set to touch *d*; a hole is drilled entirely through it and extends into the upper part of *d*. The

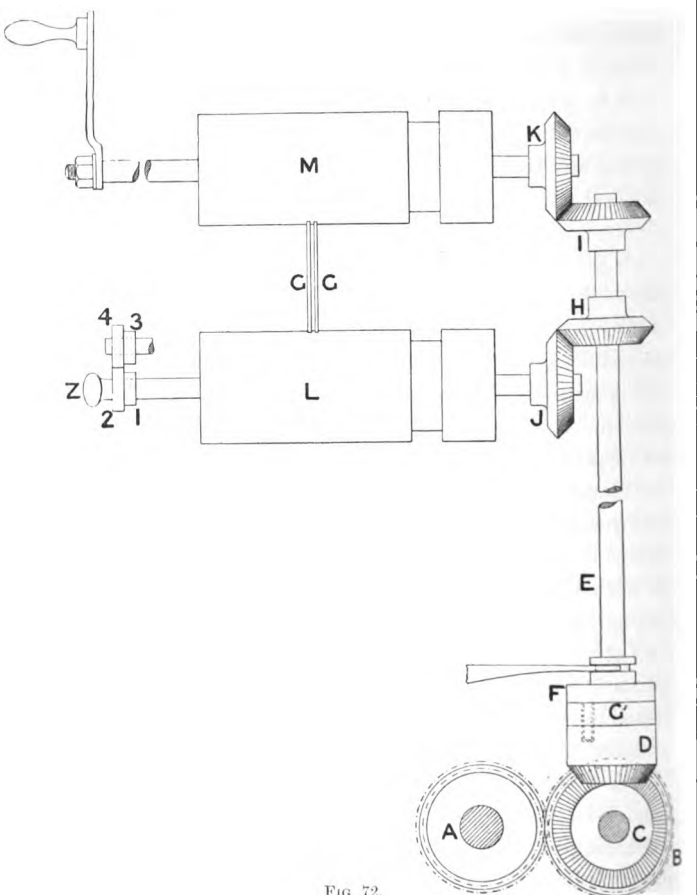

FIG. 72.

movable portion *f* carries at its under side a stud, long enough to pass through hoop *g'* and enter *d* when the clutch

Digitized by Google

is closed, but when the latter is open the stud leaves *d* and the dobby stops. This arrangement is necessary to prevent connecting the parts at the wrong place, for it will be observed that contact can only be made when the slay occupies one position.

Shaft *e* carries two bevels *h*, *i*, which respectively drive, by means of similar wheels *j*, *k*, the lower and upper segment cylinders *l*, *m*. Wheel *h* drives from the top of *j*, and *i* drives from the bottom of *k*, thus causing one to revolve in an opposite direction to the other. Cylinders *l*, *m*, take the place of griffe bars in an ordinary dobby; they have a series of teeth cast upon them that extend almost half-way round, for the purpose of lifting and sinking shafts. This is accomplished by means of three parts, all fastened together to form one—namely, vibrating lever *n* (Fig. 73), gear *g*, and connecting bar *r*. Vibrating lever *n* is made from two thin plates of wrought iron, riveted together at different points, but kept apart at others by strips of metal passed between them to form a fork and admit the gears *g*. Lever *n* is centred at *o*, and rests at *p* upon a pattern chain composed of rollers and bushes threaded upon spindles in a similar manner to those forming the chain of an oscillating tappet (see p. 54). Each roller will elevate, and each collar will allow lever *n* to fall, therefore a vibrating lever equals a needle in other dobbies.

A gear does duty for a hook; it is a toothed wheel $\frac{1}{8}''$ thick, and $5\frac{1}{4}''$ in diameter; a tooth is removed at one point, and four teeth are wanting at a point exactly opposite the first gap. It is passed between the plates of *n*, and supported from its centre by a pin, on which it turns freely. A semicircular slot permits a steadying pin, riveted in *n*, to pass through and govern the extent of motion in the gear.

Digitized by Google

The third piece is a connecting bar *r;* it is used to convey motion from the gear to the harness jacks *s*. Two pieces of thin wrought iron are also used in its construction; they are connected by rivets in the middle, but separated to

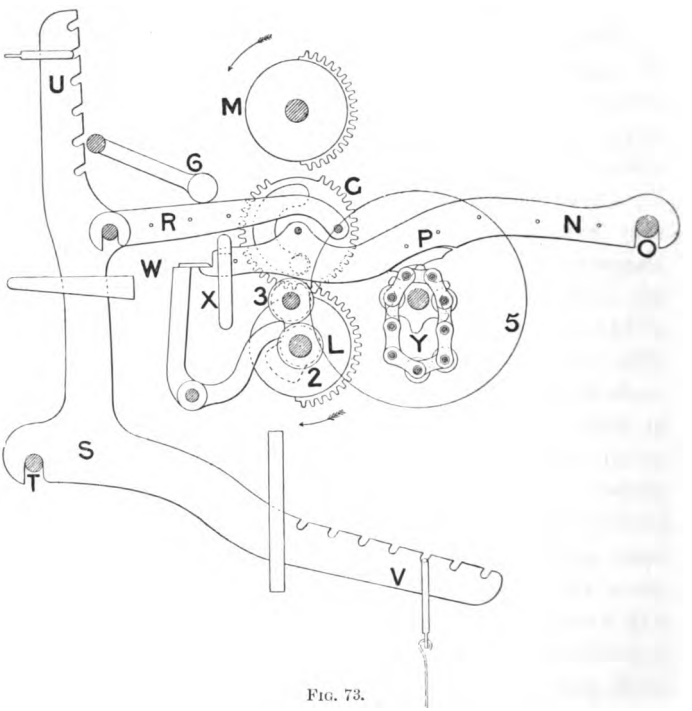

FIG. 73.

form forks at each end. Gear *g* is placed inside one fork, and both are riveted together near the periphery of the former, to act as a crank, so that the rotary motion of *g* will move *r* from one dead centre to another. The opposite end of *r* is notched and hooked upon a nipple in bell crank lever, or harness jack *s*. From arm *u* rod and strap

Digitized by Google

connections pass over guide pulleys to a top heald shaft, and from arm *v* similar connections pass under guide pulleys to a bottom shaft; hence, as jack *s* oscillates on centre *t*, arm *u* will lift, or arm *v* will sink, a shaft at each forward or backward movement of *s*.

Bowls, bushes, vibrating lever, gear, connector, harness jack, and connections are required for each heald shaft employed, and as the dobby is made to work a large number of them, the parts are necessarily closely packed; fifteen gears only occupy a horizontal space of 8 inches.

A simple levelling apparatus forms part of this dobby; it consists of a flat bar *x*, extending entirely through the machine and furnished with a handle at one end, *x* is held immediately below vibrator levers *n*, and contains two diagonal slots to receive fixed studs. By pulling the bar forward it slides on an inclined plane and pushes up all levers *n*, until the under side of gear *g* is clear of the fluted part of bottom cylinder *l*; then at the next revolution *m* will engage with all gears that have the small gap uppermost, cause them to make half a revolution, move all large gaps to the top, and thus bring all heald shafts level, and hold them so until bar *x* is dropped into its normal position. This alone stops all motions controlled by the dobby except that of the chain barrel *y*, which is constantly turned by a train of five wheels—1 and 2 are upon cylinder shaft *l*, 3 and 4 upon a stud, and 5 upon barrel shaft *y*—unless a clutch *z* is opened when wheels 1, 2, cease to move with *l*, and the barrel is stationary. The last-named clutch therefore provides a means of preventing irregularities that would otherwise result from the continued movement of *y* after other parts had been brought to a stand; and it should be opened every time the levelling bar is used.

During the time gears *g* are turning, all vibrating levers

Digitized by Google

n are locked in position by a knife *w*, mounted on arms projecting from a shaft which is rocked by a cam secured to the bottom cylinder shaft, *w* is timed to move forward and pass between the lifted and depressed ends of levers *n*, immediately before the gears begin to move, and a weight 6 rests upon the top of all lifted vibrators to assist in steadying the movement.

In motion, a bowl acts through a vibrator lever *n* to lift a gear *g* into contact with the teeth of the top cylinder *m*; then, provided its small gap is uppermost, *g* makes half a revolution and lifts a shaft, but if the large gap is on the top, the space without teeth is wide enough to allow *m* to pass without touching *g*. As a consequence, a shaft can remain up for two or more picks in succession.

A bush permits a gear to drop into contact with the toothed segment of bottom cylinder *l*, and if the small gap is at the bottom, *g* will be turned half-way round, but in an opposite direction, for the rotation of *l* is reverse to that of *m*, and a shaft will sink; if the large gap is below, *g* remains stationary.

When a shaft is in a state of rest, the crank pin used for riveting gear and connecting lever together is always in a horizontal plane that passes through the centre of gear; hence movement is from one dead centre to another, and a shaft begins to rise or fall slowly, increases in velocity to the centre, and from that point to the end of its movement a decrease will take place proportionate to the increase.

Digitized by Google

PART VI

JACQUARD SHEDDING

This machine is now made and used in so many ways that it is impossible within the limits of the present treatise to deal fully with the subject.

Two monographs have been written in our language on the Jacquard, and much matter relating to it is to be found in the various books on Manufacturing, nevertheless many vague ideas are still prevalent as to what it really is. We frequently hear of the "Jacquard loom" and the "Jacquard harness," although, as such, neither exists. The Jacquard is merely an apparatus for selecting rising warp threads, and a harness in all essentials the same as we find it to-day was used to produce figured fabrics, with other selecting parts, centuries before the Jacquard was invented.

Joseph Marie Jacquard is generally supposed to have invented this machine, but few people ever received so much credit for doing so little.

Between the years 1725-46 several of his countrymen developed and almost perfected the machine known as the Jacquard. Working models of each invention are kept in the Conservatoire des Arts, Paris, and in the Municipal Technical School, Manchester; these afford conclusive proof that Jacquard invented little or nothing essential to the machine. Even the claim that he was the skilled workman who combined the scattered pieces of former inventions to produce a beautifully simple and compact machine cannot be maintained, for, except in the cylinder, his machine was inferior to one invented by Falcon twenty-four years before the birth of Jacquard. In 1746 Vaucanson

Digitized by Google

invented a machine which chiefly differed from the Jacquard in having an endless band of perforated paper passed round a perforated cylinder, and rotated automatically, instead of an endless chain of paper cards turning on a perforated prism. Both machines occupied similar positions on the loom, and cylinder and prism received lateral and rotary movements. The cards and prism were invented by Falcon, but the perforations in the latter belong to Jacquard.

The parts of Jacquard's machine are cards, prism or cylinder, needles, needle board, heel rack, hooks, and griffe, together with suitable framing and parts for holding all in position, and allowing each to do its appointed duty. Of these parts Jacquard, in 1804, used Falcon's cards, prism, needles, heel rack, hooks, griffe, and framing, but his needle board and cylinder were drilled to form diagonal instead of vertical rows of holes; this he had to abandon, and finally Falcon's arrangement was adopted. The Jacquard machine is Falcon's invention inverted to give a direct, instead of an indirect action, and fixed on the loom where Vaucanson had previously fixed his; to which Jacquard added parts to enable the prism to move out, make $\frac{1}{4}$ of a revolution, and move in again to correspond as far as possible with the movement of Vaucanson's cylinder.

Much is said for the completeness of this invention when it is mentioned that the machine has been in use about ninety years, and in all essential parts it remains unchanged.

All modern effort has been directed towards increasing speed, reducing cost and imperfections in working to a minimum.

A Jacquard is used to produce patterns of great width,

Digitized by Google

in which all, or most of the threads in a repeat move independently. It permits elaborate effects and flowing lines to be readily obtained.

The different makes may be classified as single-acting, centre shed, double-acting single cylinder, double-acting double cylinder, open shed, twilling, and other machines specially constructed to reduce the number or size of cards ordinarily required for a given pattern.

The range of pattern obtainable from any Jacquard depends upon its capacity and the closeness of warp threads. In describing a machine it is usual to mention the number of needles it contains, as a 100 or 400 needle Jacquard, omitting those intended for selvages.

The usual sizes are—

100	in which needles are	arranged	in	4	tiers and	26 to a row.
200	,,	,,		4	,,	51 ,,
200	,,	,,		8	,,	26 ,,
300	,,	,,		6	,,	51 ,,
300	,,	,,		8	,,	38 ,,
300	,,	,,		12	,,	26 ,,
400	,,	,,		8	,,	51 ,
500	,,	,,		10	,,	51 ,,
600	,,	,,		12	,,	51 ,,
800	,,	,,		8	,,	51 two sets.
900	,,	,,		12	,,	77 single card.
900	,,	,,		12	,,	51 and 26 combined.

For higher numbers, and even for some of those given above, it is a common practice to place two or more machines of smaller capacity over a loom.

Cards are pieces of pasteboard cut into such lengths and widths as are capable of covering the needle space of any machine they are intended to be used with, and also of leaving room for lacing and holding them upon the faces of the cylinder. A 400 card for an ordinary machine is $16\frac{3}{8}''$ long by $2\frac{7}{16}''$ wide, and a 600 card is $16\frac{3}{8}''$ long by

Digitized by Google

$3\frac{7}{16}''$ wide. The weight of blanks varies considerably; if used with a 400 hand-loom machine, cards are frequently not more than $3\frac{1}{2}$ lbs. per hundred, whereas the same size for power-looms goes up to and even exceeds 7 lbs. per hundred.

Single Lift Jacquards

After being perforated, laced into a chain, and wired, as elsewhere described, cards are hung by the wires in a cradle, and passed over a square, built-up, wooden prism called a cylinder *a* (Fig. 74), each face of which contains as many perforations as there are needles in the machine; every perforation is exactly opposite a needle, and is made as large as possible, consistent with the rigidity of the cylinder, to leave ample room for the needle to enter without fear of touching the wood.

Two tapering wooden pegs *b* are driven into every face of the cylinder, and protrude about $\frac{1}{2}''$, or two similarly shaped brass pegs are supported upon spiral springs, and secured to the cylinder by an adjustable brass plate sunk into the wood to bring both flush. The pegs are immediately beyond the outside rows of holes and midway between them; they hold the cards in a fixed position, with the holes in the paper over the cylinder holes. They are assisted by two flat springs on the outer, and two wires on the inner faces.

Two metal lanterns *c* are fastened to opposite ends of *a*, so that their rounded edges coincide with the cylinder edges, but the inside is cut away to the depth of about $\frac{1}{2}''$. From the lantern two pins *d* project, which support the cylinder and permit it to rotate; they fit in bearings in a frame that either swings from a centre or moves

Digitized by Google

horizontally. Both plans have their advocates; those who

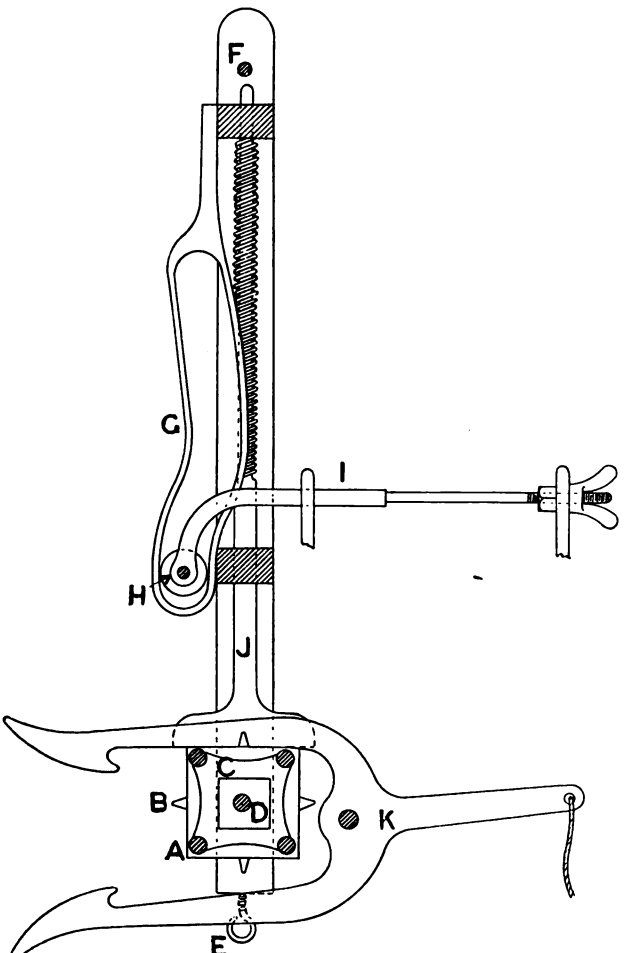

FIG. 74.

favour a swinging motion say it requires less power to

Digitized by Google

move it; that there is less risk of parts wearing through neglecting to oil the machine, and less oil is required; but against these advantages the following defects must be mentioned:—viz. the cards are more liable to be thrown off the pegs, and a swinging movement carries the cylinder holes above or below the needle centres instead of retaining them in their true positions; also the framing must be taller than a sliding cylinder requires.

Some cylinders are moved from the griffe, others move independently of any part of the Jacquard. The former method is general in single lift machines, but the griffe has a tendency to push descending hooks off the lifting bars, saw-tooth the latter, and puncture cards when cylinder and needles come into contact. This tendency is fully explained in Dobby Shedding, p. 86.

Independent cylinder motions are general in double lift machines, and are to be preferred, as they can be timed to move in and out to suit the griffe's movement. Fig. 74 shows a common method of working a swinging cylinder from the griffe. Cylinder *a* is supported in bearings which rest upon screws *e*, for the purpose of providing a vertical adjustment. The framing or batten consists of two upright and two cross pieces of wood in hand-loom machines, or metal in power-looms, that are made to swing upon two screw centre pins *f*, retained in brackets projecting beyond the ordinary framing; the screws are pointed to enter countersunk holes in the framing, and they also allow of lateral adjustment.

A piece of iron *g*, called a swan neck, is screwed to the upper and lower rails of the cylinder framing. It has a peculiar shaped groove, into which a bowl *h* takes; *h* is supported and retained by a pin between the fork of a rod *i*; the latter extends across the machine, and has a thread

Digitized by Google

cut upon its rear end to fasten it to the griffe block by lock and wing nuts; *i* is square in section near the machine front, and is passed through a square hole in the griffe to prevent turning round. As the griffe carries rod *i* up and down vertically, bowl *h*, by means of the curved slot in *g*, alternately pushes away cylinder *a*, and draws it close against the needles.

It is absolutely essential that the cylinder face shall be parallel with the needles when it is moved into contact, also that it shall be free from any movement of rotation. These are accomplished by two hammers *j*, fixed in the batten, so the head of each will rest flat upon the upper surface of lantern *c*. A spiral spring is loosely coiled upon the round shank of each hammer, and the shanks are passed through holes in the upper cross rail, whilst the tops of the spirals rest against the under side, and their bases upon thickened portions of *j*. By giving these pieces a square section for a short distance above the hammer head, and allowing them to move freely in square holes in the lower cross rail, any twisting tendency is effectually restrained.

Thin pieces of wood or iron are screwed upon the upper surface of the bottom cross rail, but are free to turn inwards and enter narrow grooves in the square hammer shanks; in case cylinder *a* is removed, hammers *j* are thus prevented from falling out of the batten.

A double forked catch *k*, with a hook on the inside of each prong, swings freely upon a pin in the main framing. Normally the upper prong rests, by gravitation, upon the top of the lantern, and the lower one is quite clear, even when the cylinder edges are vertical. Catch *k* is set to permit *a* to move out a short distance without obstruction, but ultimately the outer edge of the lantern is

Digitized by Google

taken hold of and retained by the catch; then as the cylinder continues to travel out, *k* stops any further lateral movement of the top edge and sets up a rotary one, which must equal ¼ of a revolution. As the cylinder turns, the hammer head is elevated, the springs are contracted, and assist in steadying the motion.

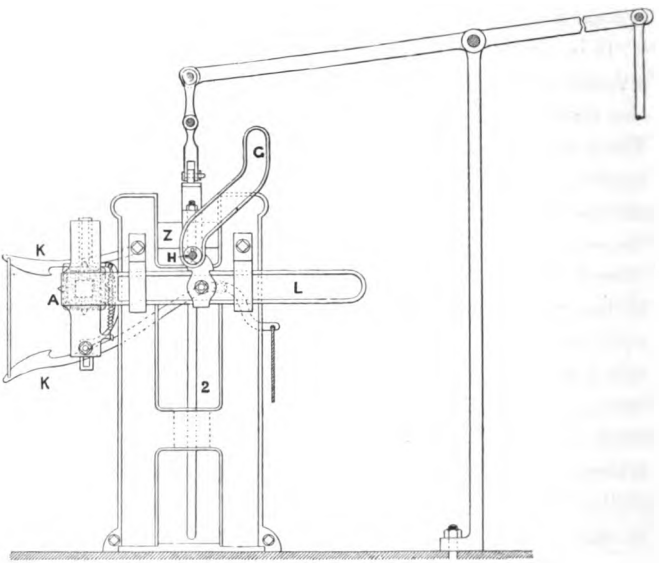

FIG. 75.

To the straight end of *k* a string is tied and weighted at its lower end. If the top catch is acting, the weight is hung upon a fixed hook, but when the cylinder is required to turn in the opposite direction, the weight is released to pull the bottom catch against the under side of the lantern, and lift the top one to clear it.

A sliding cylinder *a*, Fig. 75, is supported in bars *l*, that slide in four brackets, bolted in pairs to the outside

Digitized by Google

of each end framing. Upon both bars *l* a swan neck *g* is fastened, and the pin on which bowl *h* turns is in a bracket secured to a lip projecting from the upper griffe bearing, and outside spindle 2. Therefore, as *h* moves up and down vertically, bars *l* receive a lateral reciprocating motion.

Similar lanterns, hammers, catches, bearings, and adjusting screws to those already described are found in both machines.

A machine invented by Frederick Goos in 1842 has a cylinder *a* (Fig. 76), turned in the usual manner by catches, but it slides in a pair of protruding arms upon adjusting plates; its motion comes from griffe *z*, which works in a slot in the end framing, and has a rack cast at each extremity; the teeth extend beyond the framing, and engage with a series of studs projecting from the inside of wheels 5; they are arranged in semicircular form, and as griffe *z* moves up and down, wheels 5 are moved nearly half-way round to force out and draw forward the cylinder. Studs 6 can be placed in any position in their slots to connect arms 7, on cylinder *a*, with wheels 5. These arms are made in two pieces to facilitate setting, and studs 6 pass the back centres of wheels 5 to give a pause to the cylinder when it is pressing against the needles.

Hammers *j* are each pulled upon cylinder *a* by two springs loosely fitted upon two shanks turned downwards.

Cards operate on hooks through the medium of needles *m*, Fig. 77. They are made of from 13^s to 16^s round wire; one end is perfectly straight, the other is bent to form a loop approximately $\frac{3}{8}''$ long. An eye is made by coiling the wire round a thicker piece, to leave an opening large enough for a hook to pass through. The distance from point to eye depends upon the position of the hook

Digitized by Google

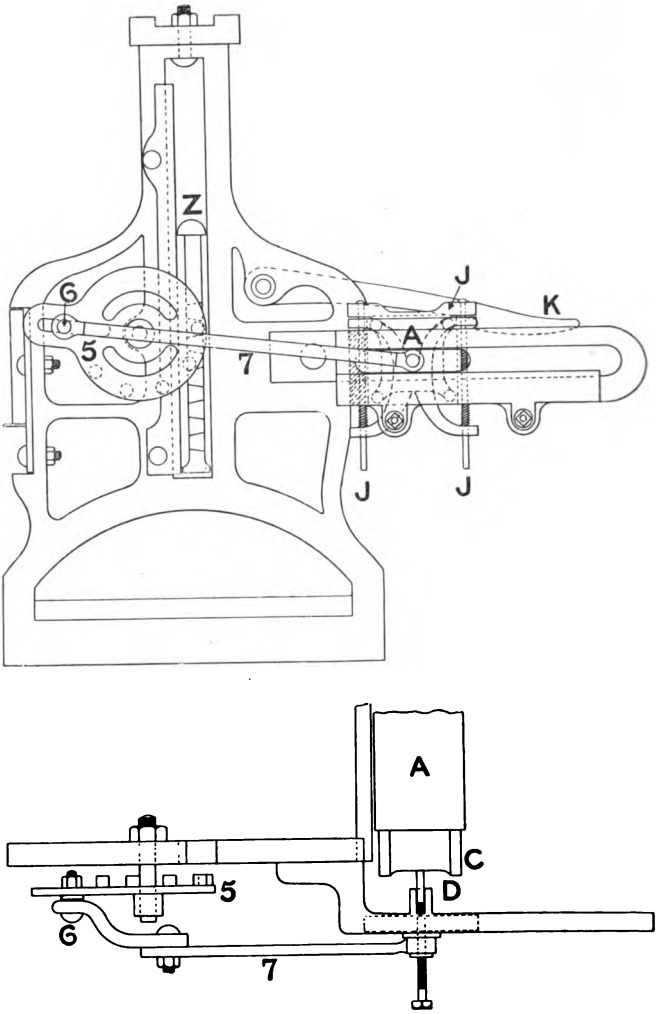

Fig. 76.

Digitized by Google

it is intended to regulate. In a 400 machine there are eight rows of hooks, and all the needles of one row have their eyes equidistant from their points; but as the hooks are placed row behind row, it is obvious that needle eyes must be bent at eight different points to place each in line with its hook. Needles are arranged in horizontal rows, the number and length of which vary with the extent of the machine; but an idea of the compactness of a Jacquard will be obtained when it is stated that 612 needles occupy a space of 13·75″ by 3·025″.

Each straight end is kept in position by passing it through a needle board *n* (Fig. 78), or an iron plate drilled to the gauge of the cylinder, viz. 0·275″, but with smaller holes,

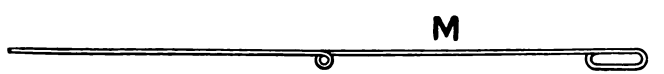

Fig. 77.

and it protrudes $\frac{1}{4}$″ to $\frac{3}{8}$″ in front of *n*. The looped ends are supported by a heel rack *o*, consisting of a scalloped framing capable of holding stout wires of 8^s or 9^s gauge in parallel lines, between which the loops pass on their flats; then a pin *p* is threaded through all the loops in a vertical row of needles. The pin and loop combined allow of a lateral movement in *m* without fear of it being withdrawn from either needle board or heel rack.

Holes are drilled entirely through a detachable box *q*; they correspond with the positions of the needles, but are large enough to receive a thin spiral spring *r*, from $1\frac{1}{4}$″ to $1\frac{5}{8}$″ long, and $\frac{3}{16}$″ in diameter, and made from 26^s to 28^s brass wire. Vertical pins *s* pass through holes in the upper and lower flanges of spring box *q*, athwart the lines of springs; they serve to hold all the springs of one row

Digitized by Google

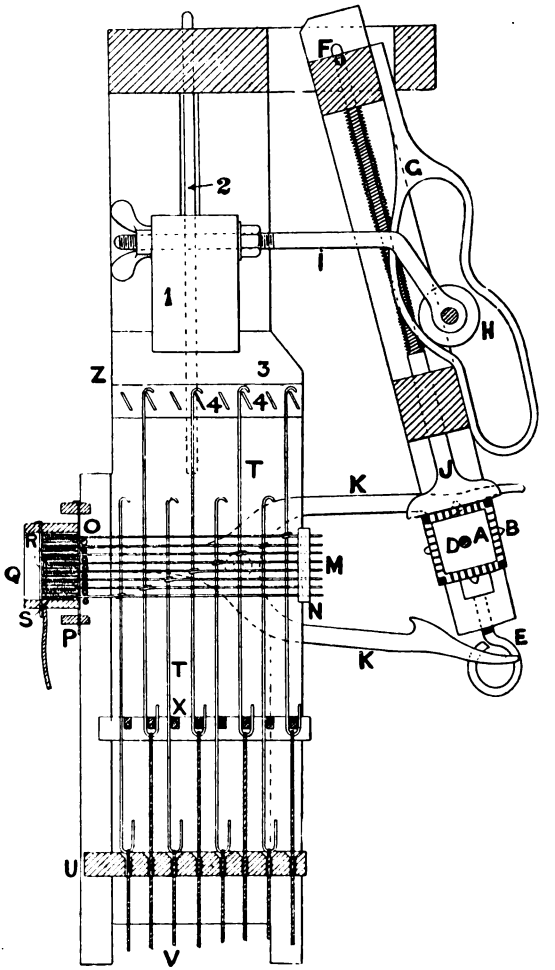

FIG. 78.

Digitized by Google

in position; and permit of the removal of any one of them in case repairs are necessary.

The free end of each spring abuts against the rear end of a needle loop, and pushes it upon pin *p*; by so doing, the straight end of needle *m* is constantly projected beyond the board *n*, but it can be forced back by exerting sufficient pressure to contract spring *r*. This takes place every time a blank in a card is presented by cylinder *a* to the needles; for *a* moves within $\frac{1}{8}''$ of *n*, and two large holes are drilled in the latter to receive the cylinder pegs; *a* may remain stationary for any length of time, the stationary period being regulated by the length of vertical slot in the swan neck.

Hooks *t* are made from 11^s to 15^s wire gauge. They are bent at both extremities; the upper bend is short, to form a catch, and the lower one gives a loop about $1\frac{1}{2}''$ long, which rests upon a bottom board *u*, about $\frac{3}{4}''$ thick, and perforated in parallel rows. From hole to hole in each row the distance is 0·27″, but from row to row in machines with short hooks, say $10\frac{1}{2}''$ long, the distance varies from $1\frac{3}{16}''$ between rows 1 and 2 (counting from the cylinder side) to 1″ between rows 7 and 8. The difference arises from an inequality of leverage, for all needles are pushed back uniformly, but the bottom row being nearer the base of a hook than the top row, will cause them to move through unequal spaces at the top. In machines with long hooks the spaces are all equal, from $\frac{7}{8}''$ to 1″ apart, because the difference in movement diminishes in proportion to an increase in the length of hook.

The upper portion of the bottom board is scooped out to sink the loop of hook *t* about equal to its diameter, and allow it to stand immediately over a perforation.

A neck cord *v* is fastened on the loop of every hook by

Digitized by Google

a "double hitch" instead of a knot, so that the hooks will not cut the cords, or an endless cord is made by warping thin twine to the required length and thickness, and the first and last strands are tied together, then after twisting them they are simply dropped over the hooks. In either event neck cords protrude about 8″ below the hole over which a hook stands. Each hook is retained in a vertical position by passing it through the eye of its own needle, and is prevented from turning round by a grid *x*, consisting of two thin end pieces of wood, or iron, each drilled for the number of rows, and to the position of hooks in the machine; strips of wood, or stout wires, are pushed into the holes at right angles to the end pieces and form a frame, which rests loosely inside the loops of all hooks *t*; this grid rises and falls with the hooks when the machine is in motion. To ensure it acting satisfactorily, the bottom bend of the hook should be long enough to leave the lifted grid inside the loops of hooks left down, say $4\frac{1}{2}$″, instead of $1\frac{1}{2}$″, the length given above. If the hooks were allowed to turn, the griffe could not lift them.

Brackets bolted to the top of the Jacquard, or supports rising from the platform that the machine stands upon, suspend a lever from its fulcrum pin; it is connected by an ordinary lifting rod either to a crank, or cam, fitted on some convenient part of the loom, and to the griffe *z* by a link. The griffe in these machines serves a double purpose; it gives motion to cylinder *a*, and to hooks *t*. A griffe block 1, to which all other parts are attached, is made to move vertically by retaining it in grooves in the end framing, or better still, by causing it to slide up and down a pair of spindles 2, secured in opposite ends of the framing; in the latter arrangement there are two bearings, about 6″ apart, on each spindle to ensure steadiness. In short

Digitized by Google

machines of 26 hooks to a row, two thin wrought-iron plates 3 are bolted to the griffe block, but in those with 51 or more hooks to a row, three plates are occasionally employed—one at each end, and the third in the middle; these plates have narrow, diagonal slits, about 1″ in depth, punched through them, one for each row of hooks. Bars of strong hoop iron 4, with feather edges, are passed through the grooves and retained by pushing a wire outside plates 3, and through holes previously drilled in knives 4, then bending it at each end to make it secure. Every knife edge is fitted close to its own row of hooks, but is not allowed to press against them. Knife and hook form an angle large enough to permit the lower edges of the former to pass the heads of the latter. If the knives were upright, they would come down on the hooks not lifted and bend them.

The action of a Jacquard is as follows:—Cards are passed over cylinder *a* and pressed against needles *m*; perforations allow needles to enter and leave all parts undisturbed, but blank places push back the needles, and as a consequence hooks *t* are inclined, for neck cord *v* serves as a fulcrum for *t* to move on. At this time the upper edges of knives 4 in griffe *z* are from $\frac{3}{16}$″ to $\frac{1}{4}$″ below the turned ends of the hook heads, and as *z* begins its upward motion, the blades catch the hooked parts of all uprights *t* and lift them, but all inclined hooks are missed.

As a mounting thread, to which a metal eye is fastened for a warp thread to pass through, is tied to each neck cord *v*, it follows that a rising hook will pull up mounting and warp threads, and therefore open a shed; the nature of which will depend entirely upon the selection made.

Cylinder *a* begins to move away as soon as griffe *z* has lifted from $\frac{5}{16}$″ to $\frac{3}{8}$″ above the level of hooks left down,

Digitized by Google

springs r force all needles m into their normal positions, catches k turn the cylinder $\frac{1}{4}$ of a revolution, and the next card is in position for repeating the operation.

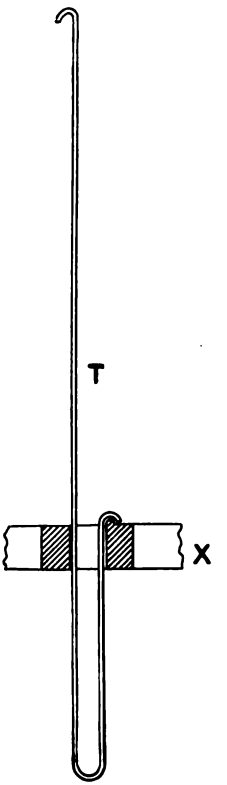

FIG. 79.

Single lift machines are still used in the manufacture of certain classes of fabrics, especially in the silk industry, and are found in several branches of the cotton trade, notably those of Leno and double cloth.

Since Jacquard introduced his machine, mechanicians have endeavoured not only to modify and improve the details, but to set aside most of its essential features.

The great cost of cards has led some to endeavour to replace them, others to reduce their number and dimensions. An endless band of perforated paper, approaching the thickness of ordinary writing-paper, has been used. Wire cloth, and canvas made from various textile fibres, had their meshes closed to form a pattern by varnish, or other material capable of resisting the puncturing and breaking-off tendency of needles, and were applied to the loom. Endless bands of flexible metal have been painted with an insulating varnish, rotated automatically, and acted upon by electromagnets placed in front of an ordinary Jacquard.

Neck cords have been carried entirely through the machine and used instead of hooks. Hooks are made to

Digitized by Google

act without spring or other contrivance for holding a needle point forward, but up to the present most of these, and many other attempts, have resulted in failure.

A beneficial change in the form of hook is shown in Fig. 79; the bottom loop is bent back and turned up about 6″, then again curved sharply outward to form a second hook. A stationary cast-iron slotted grid plate *x* has semi-circular ribs, approximately ¼″ in diameter, and running in parallel lines lengthwise of the machine; it contains the bottom bend of hooks *t*, and effectually prevents them from turning, for they are never lifted out of the slots, and when not lifted all back bends rest upon the ribs. Most of such single lift machines are provided with a bottom board, but

FIG. 80.

the hooks do not touch it, by from ½″ to ¾″; for it merely serves as a guide to the neck cords.

It is now unusual to form a needle eye by coiling the wire entirely round a hook, as such an eye renders it difficult to remove damaged parts. Fig. 80 shows the form of a modern needle with a half-round eye, which constant use has proved to be quite sufficient to work correctly and leave all the parts readily accessible.

In or about the year 1830 William Jennings claimed the invention of a machine that worked without hooks, which is still used but not extensively. Neck cord *v* is carried vertically up the machine; it passes through a needle eye, and also through a perforated board, that takes the place of a griffe, and is finally tied to a cross piece at the machine head. A knot is made upon each cord immediately above

Digitized by Google

the board when the latter is at its lowest point. The holes, $\frac{3}{16}''$ in diameter, are large enough to allow a knot to pass, and are directly below them, but a saw slit that is only wide enough to take a neck cord *v*, runs into every hole; hence, if a needle is pushed back *v* is pressed into the slit and retained there until the board begins to rise and carry up all cords in the slits. Cords with their knots straight above the holes will be left down, then a trap board pushes all needles forward as soon as the lifting board reaches the bottom.

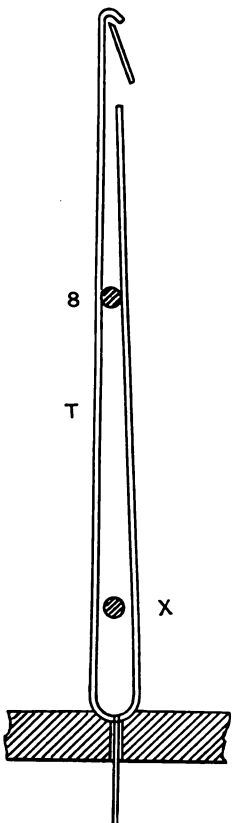

FIG. 81.

Goos also, in 1842, introduced a new form of hook which dispensed with spring box and springs. As now made for machines with from 200 to 400 needles, hooks *t* (Fig. 81) are $10\frac{3}{4}''$ long, and the straight leg is only $1\frac{1}{2}''$ shorter than the hooked one. Both legs are $\frac{5}{16}''$ apart at the bottom, but they gradually converge and touch at the highest point. A stationary grid of stout wire 8 is bolted to the end framing $4\frac{1}{4}''$ below the hook heads, and each wire passes between the loops of one row of hooks; therefore, when needles are pushed back, the hook legs are separated, and the springy nature of the wire forces all needles forward as soon as they are liberated by the cylinder. A grid *x*, connected to the griffe, is carried up

Digitized by Google

and down as the machine moves, to prevent hooks from turning.

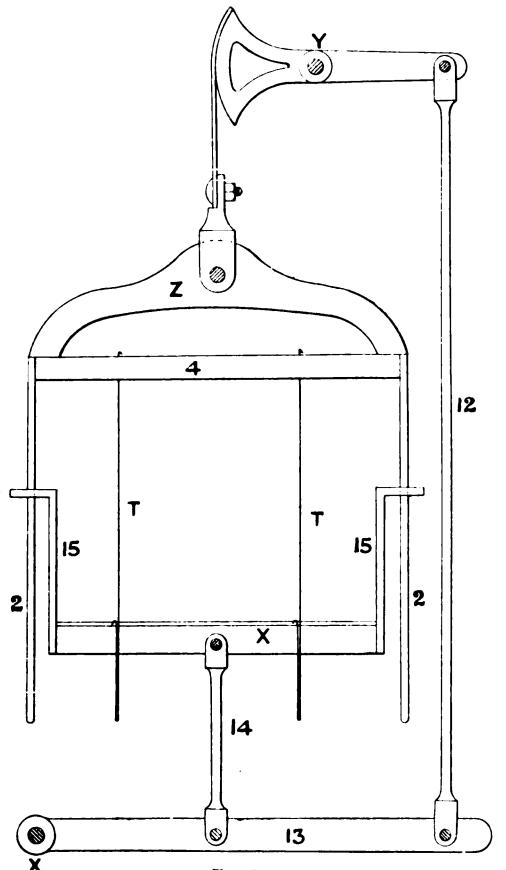

FIG. 82.

This arrangement works well, but the parts are more difficult to remove for repairs.

Digitized by Google

Centre-shed Jacquards

It has been previously mentioned that all single-acting machines work slowly, owing to the necessity of closing one shed before another can be opened; and again, the want of a counterpoised harness frequently puts great strain upon the loom.

The Ainsley Jacquard was invented in 1876 with a view of remedying both these defects, but it created another almost, if not quite, as bad. In making changes it imparts movement to every thread of warp, and sets up a swinging in the harness that is very objectionable, especially when high speeds are attempted; the lifting crank of a loom has also to sustain the entire weight of the harness.

In construction the parts are simple and as readily repaired as those in other machines of equal capacity. Figure 82 shows all that is essential to the machine: 4 is one blade of griffe z, from the frame of which a strap goes up to a quadrant on lifting lever y, and a rod 12 couples y to a lever 13, fulcrumed at X. A similar rod 14 connects grid x with 13. An ordinary lifting apparatus is used to set the parts in motion: 4 ascends with all hooks t required to form the top shed, and by means of rods 12, 14, and lever 13, grid x descends simultaneously, therefore a shed is formed in half the time required to form one by a single lift machine. When motion is reversed, blade 4 and grid x move towards each other. Both are steadied by ordinary spindles 2 secured to the griffe frame, that pass through bearings on the top of brackets 15 bolted upon grid x.

Double Lift, Single Cylinder

Double lift Jacquards possess several advantages over single lifts; in the first place, the weight of a falling shed

Digitized by Google

helps to lift a rising one, and so saves power; in the second place, speed can be considerably increased without an increased wear and tear, for the moving parts only work at half the speed of the loom shaft, except in single cylinder machines of the Crossley type, where the cylinder strikes once for every revolution of the crank; in the third place, less strain is put upon the warp by moving it through a reduced space.

The first machine built on the double lift, single cylinder principle is of doubtful origin; it may be an invention of Jacquard, but it is certainly not of English design.

In 1820 F. Lambert received a patent for a "communication from a certain foreigner." It consisted of a machine containing 200 hooks and needles arranged in rows of eight. The first four rows were moved by griffe *z* (Fig. 83), and the last four by a second griffe *z'*. Hooks *t* from rows 1 and 5 were connected by knotting the neck cords *v*; those from 2, 6, 3, 7, 4, and 8 were also similarly coupled.

Needles *m* in rows 1, 2, 3, 4, acted on hooks in rows 1, 2, 3, 4, and those in 5, 6, 7, 8, acted on hooks in rows 5, 6, 7, 8. An ordinary swinging cylinder motion, governed by a swan neck attached to griffe *z* only, held the needles back for two picks, and made a card answer for two sheds, if holes for the first were cut on rows 5, 6, 7, 8, and for the second on rows 1, 2, 3, 4.

Hooks *t* were exactly the same as they are to-day in hand-loom machines, also grid *x* and the bottom board. It contained probably the first spring, and spring box *q*, and a needle *m* was used with a loop at the end. Two independent levers and two treadles were used to actuate griffes *z*, *z'*. By elevating *z'* for the first pick, and causing *z* to begin its rise as *z'* began its fall, time was saved,

Digitized by Google

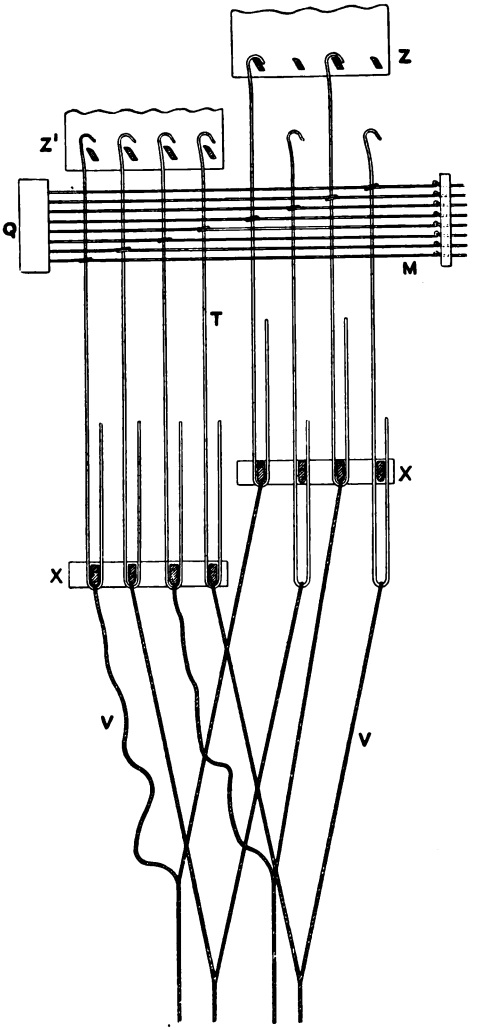

FIG. 83.

Digitized by Google

but before z' could rise for the insertion of pick three, z must be at its lowest point.

In 1859 Crossley introduced a machine which embodied the principle of operating two hooks from one needle, thus a 408 needle Jacquard has 816 hooks arranged in 16 rows of 51 hooks each.

As now made by Devoge & Co., a pillar rises from the platform that the machine stands upon to provide a bearing for the fulcrum pin of two lifting levers. One is connected to griffe z (Fig. 84), the other to z' by links and studs from their inner ends, also to a double-throw crank on the bottom shaft of the loom by connecting rods on their outer ends. Upon the upper end edges of griffe frame z two wrought-iron plates 3, both $2\frac{3}{4}''$ deep, are bolted and slotted to receive eight griffe blades 4, all $1\frac{3}{8}''$ deep. Two similar plates 3′ are bolted inside the end framing of griffe z', but are 8″ deep, and slotted vertically to a depth of $6\frac{1}{2}''$ from the bottom, and wide enough to allow the knives of z to move up and down between the slots; they support a similar series of blades 4′ in inclined slits near the bottom of each tooth. Frames z, z', each receive a steady vertical motion from long spindles 2 keyed upon them; and the latter move freely in bearings on the machine framing.

Hooks t are of the usual type, but 16″ long by $\frac{5}{16}''$ across the bottom bend; they are supported by grid x, and protrude $4\frac{1}{2}''$ below it. All the rows are equidistant about $\frac{15}{16}''$, and pairs of hooks from contiguous rows are coupled by tying their neck cords v together 9″ below the hooks. Needles m are $16\frac{1}{2}''$ long, and have eyes formed, as shown in Fig. 85; those in the top row actuate hooks in rows 1, 2, and successive rows of needles govern following double rows of hooks.

Digitized by Google

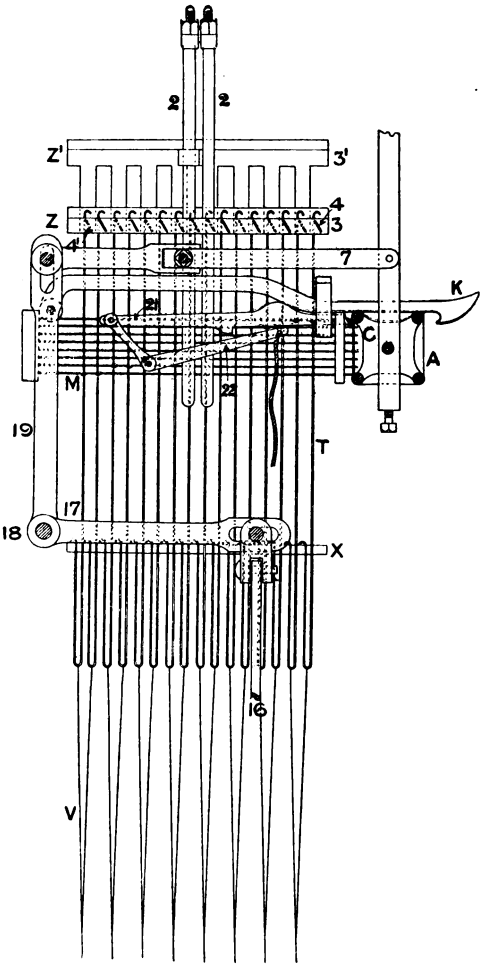

FIG. 84.

Digitized by Google

The motion of cylinder *a* is independent of griffes *z*, *z'*; it is derived from a crank on the main driving shaft, and conveyed by a rod 16, and a series of adjustable levers and arms. Rod 16 is connected to a lever 17 keyed upon a horizontal shaft 18; the latter is approximately on a level with grid *x*, and should extend from a point immediately over its crank to a point somewhat beyond the outer end framing. Two vertical levers 19 are also fastened by set screws upon 18 to support arms 7, that are made fast to the framing of an ordinary swinging cylinder motion.

As the cylinder crank revolves it gives a vibrating motion to rod 16, lever 17, shaft 18, levers 19, arms 7, and cylinder *a*. Each part being adjustable, it follows that cylinder *a* can be set to strike needles *m* when griffe *z* or

FIG. 85.

z' is too low to allow hooks *t* to be pushed off, also that different lengths of dwell can be obtained; but if the latter is too short, hooks will be taken up that should be left down; if too long, the cylinder moves out and in too fast, throws the cards off, and stabs them. When the double-throw griffe cranks are on their top and bottom centres, the cylinder crank should be on or near its front centre.

A single catch *k* (Fig. 84) is used to turn cylinder *a* forward, but a bar 21 moved by hand is used to turn it back; this bar slides in bearings bolted to the end framing of the Jacquard and on a level with the top corner of lantern *c*; it has a catch on the under side that comes into contact with one of the bearings to stop further forward motion, also a curve on the top edge to slip under catch *k* and lift it off lantern *c* just before rotary motion is given to *a*. A

Digitized by Google

bell crank lever 22 moves freely upon a pin, and its vertical arm supports the rear end of bar 21; from its lower arm a cord passes down to a convenient height for the weaver to grasp and pull it. Every time it is pulled, bar 21 slides out and turns cylinder *a* over in the backward direction.

In this machine griffes *z*, *z'*, rise and fall alternately, and a card is pressed against the needles when both griffes are at opposite extremities of their movement. If a hole in a card is opposite any needle, two hooks will remain vertical, and the next griffe to rise will lift one of them. If, on the succeeding card, a blank is opposite the same needle, before that needle can push back the lowest hook it must act through the lifted one; this puts a certain amount of strain upon hooks and needles, but it can be somewhat reduced by allowing a lifted hook to swing slightly at the lowest end, the knife serving as a fulcrum.

As a consequence of two neck cords being tied together, both must act upon the same warp thread; hence, if one hook lifts a thread to the top shed, immediately that hook begins to fall the thread falls with it, but is arrested by the second hook, which begins to rise as the first begins to fall; the latter is, however, powerless to control the warp at once, because the lifted hook left the second neck cord slack, and until this slackness is taken up, a rising hook can have no effect on the warp. At the centre of a shed both neck cords are equally tight, and the ascending hook takes the thread again to the top. But where changes are to be made in the positions of the warp threads, one arrives at the bottom as the other arrives at the top.

The action of this machine is easy upon the warp, but it has a tendency to twitch and break the neck cords when the direction of motion is reversed amongst them, and the

Digitized by Google

rapid strokes of the cylinder are harsh upon the cards; these prevent the machine from moving as rapidly as one with a double cylinder. Still its speed exceeds that of a single lift by from 20 to 30 picks per minute. Its central features may be summarised as follows:—(1) Lifting a warp thread any number of times without allowing it to sink to the bottom; (2) shedding performed in less time than with single lift; (3) less strain upon warp threads, hence weaker yarns can be used; (4) beating up with a semi-open shed; (5) cards all in one set, no fear of one getting before the other. Its defects are: Cards have a tendency to leave the cylinder, they are liable to get broken and stabbed; hooks and needles are subjected to a considerable strain, neck cords break, and double necks are difficult to tie up level.

Two flat steel springs are fastened by set screws to the upper cross rail of the batten and press against a card on the outside face of the cylinder, and two round pieces of steel wire, similarly attached to the batten, press the inside card close upon the cylinder pegs, hence both sets of springs combine to hold cards on three sides of the cylinder, and tend greatly to prevent flying off.

High speeds frequently set up such excessive vibration amongst the hooks that falling griffes drop on the heads of hooks left down and bend or "crown" them. This is a serious matter, and has led inventors to apply remedies, such as lengthening hooks above the top row of needles, and deepening griffe blades so much, that in their lifted positions the bottom edges of all blades are always below the heads of hooks left down. Or the same result may be achieved by extending a hook leg above the hook itself, and thus preventing all lifted griffe blades from reaching the top of hooks left down.

Digitized by Google

Notwithstanding these and similar inventions, the great majority of Jacquards now in use are furnished with narrow blades and hooks, as previously described.

Double Cylinder Machines

Double lift, double cylinder machines are probably the most theoretically correct Jacquards in the market, for there is no undue strain upon any part when changes are made; everything moves at half the speed of a slay, and wear and friction are reduced to a minimum; but it seems to be the fate of all things invented to have a weak part somewhere, and that part is found in this case in the division of a set of cards into two parts—one containing all odd picks, the other all even ones.

The machine cylinders strike alternately, and they should bring all cards before the needles in consecutive order; but in practice it has been found difficult to satisfactorily apply anything that will prevent them from getting out of their true rotation. High speeds render this matter doubly troublesome, for a considerable length of material is woven in a short time, and if cards are not working properly, either the damaged fabric must be unwoven, or the pattern will be spoiled.

This machine (Fig. 86) is simply two single lift Jacquards, with long needles and hooks combined in one framing. All hooks *t* face the cylinder from which they are governed, but the bottom loops of one set are bent forward, whilst those of the other set are bent back; this is done to distribute them equally along the surface of grid *x*. Neck cords *v* from two contiguous rows are tied together, therefore it will be found that hooks forming pairs are moved by needles *m* actuated by cards on different

Digitized by Google

cylinders, also that if one needle is in the top, the other is

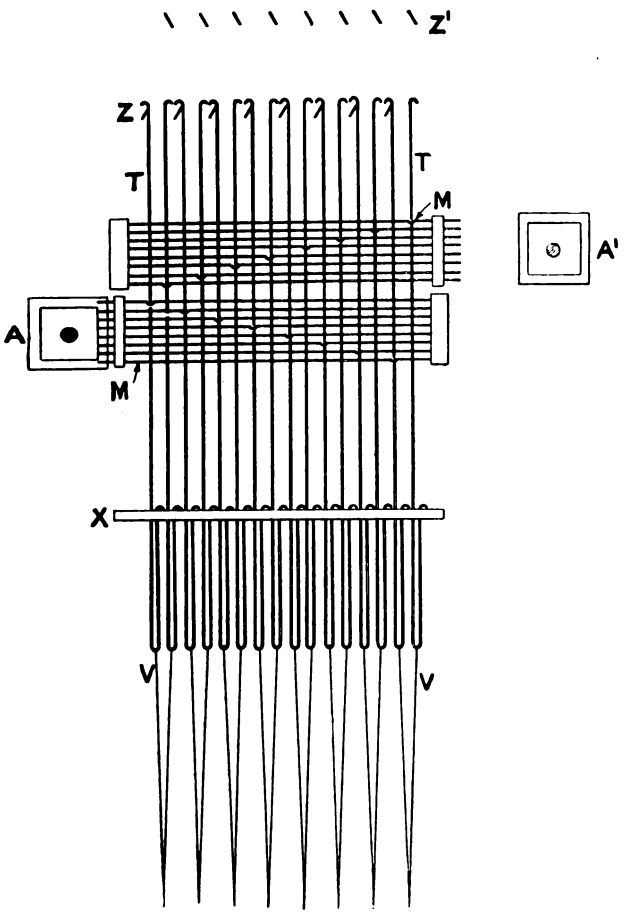

FIG. 86.

in the bottom row; for this reason the cards of one set must be laced forwards, and those of the other backwards.

Digitized by Google

Cylinders *a*, *a'* are coupled by bars in such a manner that when one is touching its needles the other is as far from them as possible; both are moved independently of griffes *z*, *z'*, by parts resembling those described as forming part of Crossley's machine, but the speed of a driving crank for this machine is only half that of the former, hence the cylinders must be driven from the bottom loom shaft, or by gearing from the top shaft. Assuming cylinder *a* is pressing card 1 against its own set of needles, cylinder *a'* will be holding card 2 facing but not touching the other needles, then as *a* moves out, griffe *z* ascends, *a'* moves in, and griffe *z'* descends.

Numerous locking motions have been introduced with a view of rendering it an impossibility for one cylinder to get before the other, but from defective unlocking apparatus, complication of parts, or entailing extra trouble upon the weaver, most of them have been discarded.

A simple detector, known as "blockhead boards" and "dolls," is often found on these machines; it consists of two pieces of flat wood placed on a level with the weaver's eye, and numbered in large figures 1, 2; each is suspended by a mounting thread from a spare hook in opposite machines, and holes are cut in the cards to lift these boards in succession, but at intervals of 8, 12, or 16 picks. So long as the fall of number 1 is followed by the rise of number 2, the cards are working correctly, but immediately 2 rises before 1, or as soon as an interval of one or more picks intervenes between the lifting of the boards, the weaver knows something has gone wrong.

It will be noticed that the above plan is merely a detector, not a preventer.

The two following contrivances show how a loom can be stopped when anything goes wrong with the cards:—

Digitized by Google

Green and Barker's Stop-motion

The patentees make use of two contiguous hooks *t*, *t'* (Fig. 87) in the spare row of a machine which are coupled by their neck bands, and a cord is carried down to a bell crank lever 43, so placed that its vertical arm shall push the starting handle out of the driving notch and stop the loom whenever 43 vibrates. A pawl 44, loosely fitted upon this arm, rests on the top of a fixed hook 45, until an oscillation occurs, when it falls and becomes locked. It thus prevents the loom from being restarted before the cards have been put into consecutive order, or pawl 44 is lifted.

A second elbow lever 42 has a head furnished with a slot for the purpose of spanning hooks *t*, *t'*; it receives a rocking motion from a crank pin in a stud wheel 46; the latter is driven by a pinion 47 on the bottom shaft, and their teeth are proportioned to give the required movement to lever 42.

The inventors state that spare holes in cylinders *a*, *a'*, outside the cards, may be pegged to move hooks *t*, *t'*; but this is a very uncertain method, because either cylinder may continue to turn without moving cards with it if they are off the pegs. It is also said that alternate cards can be perforated opposite needles *m*, *m'*; still, it is probably best to drive wheel 46 once round for six revolutions of the main driving shaft, and leave a slot in the head of 42 long enough to prevent contact with *t*, *t'*, except when the crank pin in 46 is on the top and bottom centres; on the top *t* will be pushed back, on the bottom *t'* will be pulled back. Then by cutting a hole in cards 1, 4, 7, 10, etc., and leaving intervening cards blank, lever 42 will prevent *t* from rising when card 1 is presented to needle

Digitized by Google

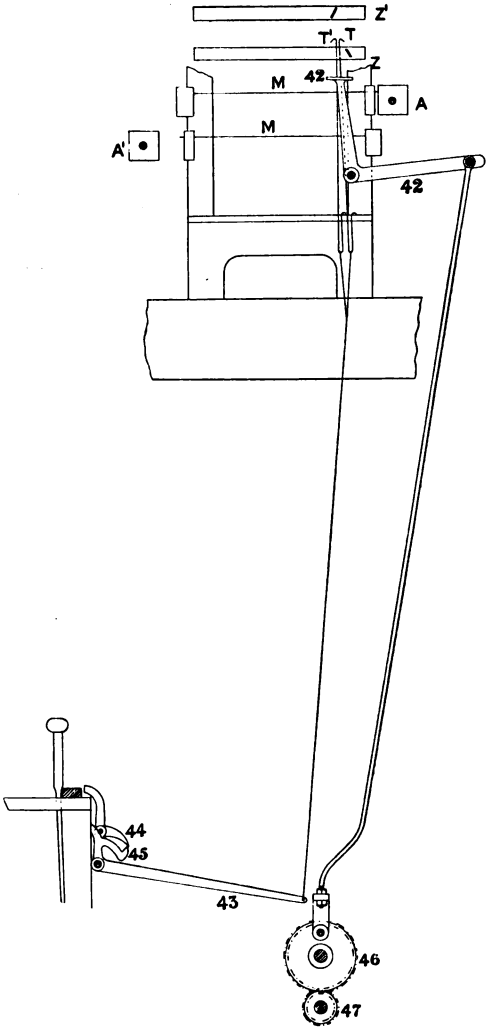

FIG. 87.

Digitized by Google

m, and *t'* when card 4 faces needles *m'*, if true rotation is maintained; if not, a hole in a card will be opposite a needle when lever 42 is not holding a hook back; the latter will then rise and stop the loom.

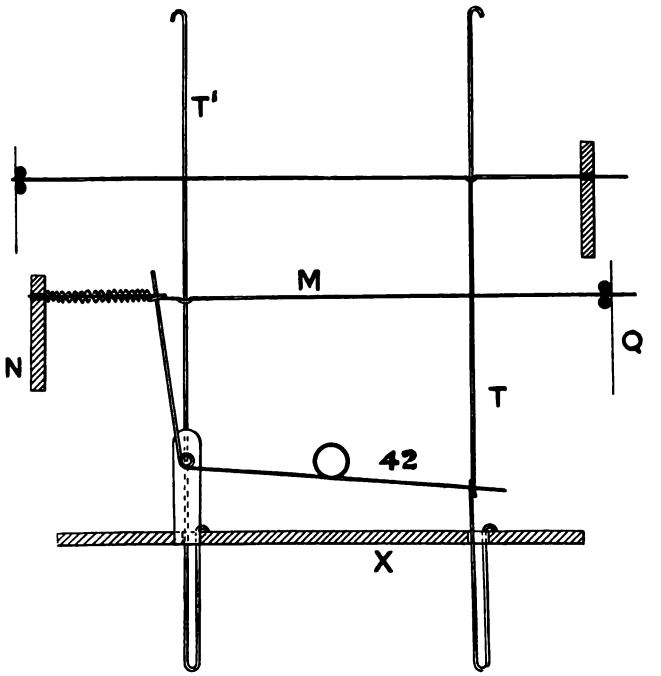

FIG. 88.

DEVOGE'S STOP-MOTION

is simpler than, and quite as satisfactory as, the foregoing. It requires two spare hooks at the driving side of the loom that must be moved by opposite griffes and needles. Hook *t* (Fig. 88) has an eye formed at a short

Digitized by Google

distance above grid x, through which the lower arm of an elbow lever 42 passes; 42 is made of wire and coiled midway between its fulcrum and end to serve as a spring; it is loosely fitted upon a pin in the framing, and its upper arm takes into a supplementary eye in the needle m that governs hook t'.

Instead of an ordinary spring in box q, a spiral is threaded upon m between its extra eye and the needle board n to hold t' off its griffe. A cord from t' goes down the lower arm of elbow lever 43 (Fig. 87), which must move the starting handle in case t' is raised. A lingoe is employed to pull down t after each upward movement.

Cards are cut to prevent a loom from stopping when they are working correctly, and to cause it to stop if they are not in unison; thus every time hook t is lifted, needle m and hook t' are pushed forward, and the latter will rise to stop the loom if a hole in the following card is opposite needle m, but a blank will simply press back m and t', and cause lever 42 to bend at the coil; therefore, any system of cutting can be adopted that will push back t' immediately after t has lifted.

As an example, let odd-numbered cards be put on the top cylinder and holes cut in 1, 3, but 5, 7 to be blank. Cards 2, 4 must then be blank, and 6, 8 can be cut for 8 picks to the round. For 12 picks 1, 3, 5 can be cut, 7, 9, 11 left blank, if 2, 4, 6 are blank, and 8, 10, 12 are cut, then when cards get out of rotation, a hole will fall opposite needle m with hook t lifted; as t falls, t' will rise and stop the loom.

Open-shed Jacquards

To make changes only when changes are absolutely necessary is the ideal system of shedding, because friction

Digitized by Google

and breakages are reduced, and steadiness is increased; but notwithstanding repeated attempts made by different men, it is still found difficult to so model a Jacquard, that the advantages of open shedding shall be secured without creating difficulties that more than counteract the benefits to be derived from the system.

The central feature of a machine invented by Cheetham and Sutcliffe consists in holding a lifted hook up for any length of time, and thus allowing weft to be beaten into a fully open shed. The machine is constructed on the double lift, single cylinder principle, with one needle *m* moving two hooks (Fig. 89), or rather, a double hook, with both legs 15″ long and equally bent. This form has been adopted to avoid the trouble and loss arising from the use of double neck cords. Each hook rests upon a bottom board *u*, through which a single neck cord *v* passes.

At a point $4\frac{1}{4}$″ above the bottom board an internal hook *t'* is formed on each back leg for the purpose of suspending it from a stationary griffe *z*2, fixed $7\frac{1}{2}$″ above *v*, on brackets bolted to the end framing.

All griffe blades are $1\frac{1}{4}$″ deep, those of the top griffe *z'* are fixed in slotted plates 11″ deep, whilst those of the bottom griffe *z* are secured to plates $2\frac{1}{4}$″ deep. A second plate is bolted inside each end of frame *z* and drilled to allow eight horizontal pins to pass through; the pins project from opposite ends of wrought-iron plates 23, similar in form to a griffe blade, but 2″ deep, and retain 23 with their lower edges parallel with, but $\frac{1}{8}$″ above, and $\frac{1}{4}$″ in advance of knife 4. All touch projections on two sliding bars 24, and are capable of swivelling on the pins.

A hole is drilled in the cross rail near each end of the upper griffe frame *z'*, which, with brackets on the end

Digitized by Google

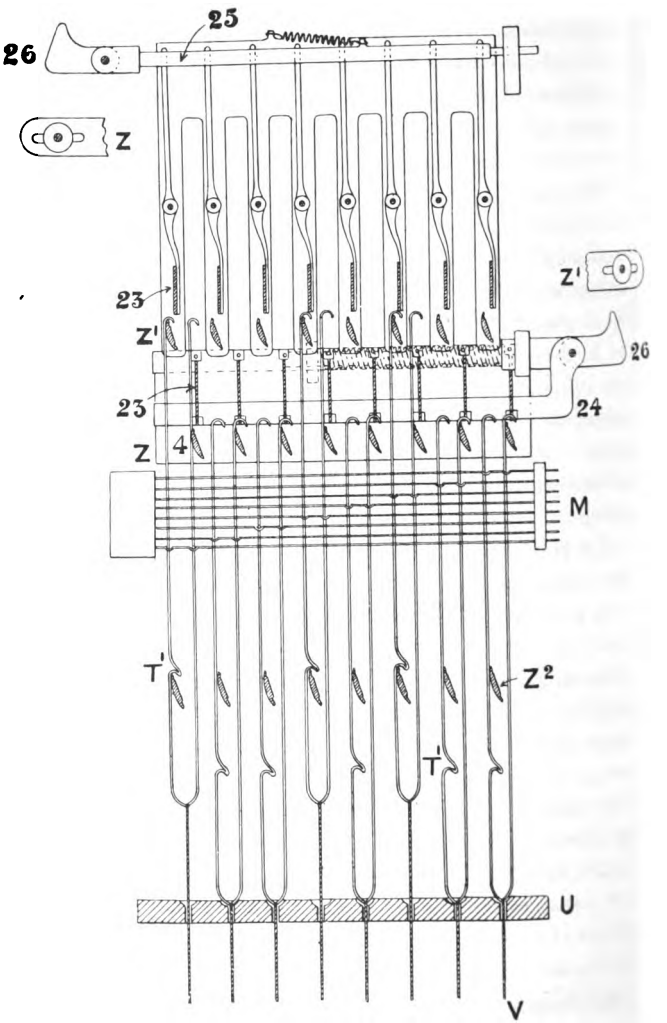

FIG. 89.

Digitized by Google

pieces, holds two horizontal sliding bars 25 against its inner edges; the bars are drilled vertically to take the ends of eight upright iron pins, 8″ long by ¼″ in diameter, that are each centred 2½″ from the bottom, upon one of the long griffe plates, and their lower ends are fast to a second set of plates 23 fixed in the same positions with relation to griffe *z′* that the former set occupy to griffe *z*.

Loosely fitted by a pin to one end of each sliding rod is a swivelling piece 26, with an inclined upper surface that is brought into contact with one of two antifriction bowls, free to turn upon studs, and secured by brackets to opposite ends of bottom griffe frame *z*. As these bowls are carried up by *z*, pieces 26 turn partly round their respective pins and allow the bowls to pass; but when the griffe descends, 26 are rigid and the bowls press upon the inclined surfaces, force back sliding bars 25, cause plates 23 to vibrate and carry their lower edges against the free legs of falling hooks, and thus prevent the rising griffe from carrying those hooks up again.

Two pendent arms from griffe *z′* move similar bowls into contact with similar swivelling pieces that project from the frame of *z*, and thus the other free leg of each descending hook is pushed out of reach of the ascending griffe, but this only takes place when *z*, *z′* are level.

A lifting griffe elevates hooks *t′* about ¼″ above the top of stationary griffe *z*2; they then spring over the bars and hang in that position until the pattern requires them to change it, when they are pushed off by a blank in a card and sink with the griffe that happens to be up. Since all hooks *t′* are lifted above *z*2 as cylinder *a* presses a card against needles *m*, the force required to push them clear of *z*2 is little, if any, more than that needed to press back a needle in an ordinary

Digitized by Google

Crossley machine, assuming hooks in both to be made of similar wire.

The pushing-off plates 23 make it a somewhat difficult matter to see into and get at parts needing repair, but otherwise the machine works well.

Card-saving Machines

Card-saving Jacquards are of various kinds; some are specially constructed to weave certain classes of fabrics, such as cross-bordered, swivel, and compound, whilst others are of general application, as, for example, the Verdol, Shields, Bessbrook, and Bonelli.

If a cross-border machine is employed, a considerable saving in cards results in the manufacture of handkerchiefs, table-covers, bedcovers, towels, or other fabrics with a border all round; for all can be produced from one repeat of end border pattern, and one repeat of side border and middle combined (the Jacquard must be of sufficient compass to produce both the last-named parts simultaneously).

Assuming at a moderate computation that there are six repeats of middle, then $\frac{5}{6}$ of one and $\frac{1}{2}$ of the other cards would be saved as compared with an ordinary machine placed over a fast-running loom, in which two repeats of end border, and as many repeats of middle and side border as are necessary to make up the length of piece, would be required. Or failing that, the loom would stop to change cards twice in each fabric—once to put on the middle cards after weaving the first border, and once to replace them for the last border; but rather than adopt the latter course manufacturers of cotton goods, at least, incur the cost of a full set of cards.

Digitized by Google

Cross-border Machines

In cases where a single-acting machine can be used, probably the best type to adopt is a double lift, double cylinder, when by passing border cards round one cylinder, and middle cards round the other, and employing two connecting rods which will fit on the same crank pin, but only using one at any time, that in use will continue to work one cylinder only until a change is necessary, then by sliding off the one, and sliding on the other rod, the second pattern can be woven.

This simply converts a double lift machine into a single lift, it avoids all complications, and allows changes to be made in a short time, but it is obviously unsuitable for high-speed looms.

For the last-named class of work Davenport and Crossley's machine is the best known type. When in action it is an ordinary double lift, single cylinder Jacquard, constructed with two cylinders and a duplicate set of needles, so that both cylinders and sets of needles move the same hooks, but when one cylinder is working the other is stationary.

By passing border cards round a' (Fig. 90), and middle cards round a, and so connecting a, a', that by moving a lever one stops and the other starts, any number of repeats of each part of the pattern can be woven from one repeat of cards.

Hooks t in a 400 needle machine are $19\frac{1}{4}''$, and needles m $23\frac{1}{2}''$ long; the latter are provided with an extra cranked eye bent immediately below the coiled eyes in a top set of needles m', which are 8″ long, and provided with ordinary heel loops. Each eye of m' receives an upright wire pin 27, that passes through the back crank in a needle m; it

Digitized by Google

is hooked at the top to prevent it from falling, and is approximately $4\frac{1}{2}''$ long. The top rows of m' are connected by pins 27 to the top row of m, and succeeding rows of needles by succeeding rows of pins; as a consequence, if

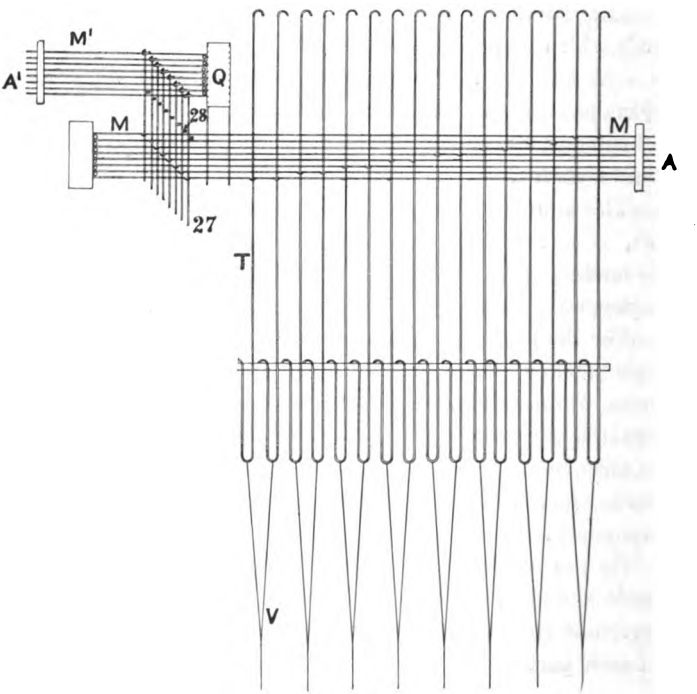

FIG. 90.

the number side of cards on cylinder a faces the needles, that on cylinder a' must be inverted to face the cylinder, or the pattern would be spoiled.

Eight horizontal bars 28 are $\frac{3}{8}''$ wide, $\frac{1}{8}''$ deep, and long enough to reach across the machine, each is set to

Digitized by Google

touch the back of all pins 27 that form one row; hence, if a supplementary needle m' is pushed back, pin 27 swivels on bar 28 and draws back a corresponding needle m, together with two hooks, into the positions they would occupy if the point of needle m had been pressed back by a blank card. Top bar 28 is passed between the two bottom rows of needles m', the bottom bar is between the top rows of m, and the six remaining bars are equidistant in the gap between m, m'.

Needles m are much too long to work without risk of bending instead of pushing back the hooks; this tendency is to a large extent prevented by supporting them at two points; the first support comes from the heel-rack pins of m', which are made long enough to pass between needles m, and a second set of pins are pushed through holes in the inside flanges of spring box q to serve a similar purpose.

The machine contains more wire than is desirable, and the parts are difficult to see or remove, but it has been greatly improved by using flat bars 28 and hooked pins 27 instead of coiling an eye on 27, and threading them upon a round fulcrum pin, as in Nuttall's automatic card-repeating machine, from which the idea has evidently been taken.

Cylinders a, a' are put in and out of action in the following manner:—Connecting rod 16 (Fig. 91), horizontal arm 17, shaft 18, and vertical arms 19, are all as described for Crossley's single cylinder machine; but cylinder arms 7, 7′ have each a notched, slotted end attached to receive studs 20, 20′, fixed at opposite ends of rocking-lever 9. When stud 20 is in the notch of 7, stud 20′ is in the slot of 7′, and 7 is in motion. Changes are made by lever 29 and links 30, 31, the former is bolted to arm 7, and the latter to 7′. A cord or wire 32 is secured to lever 29, and also to quadrant handle 33, which is retained in a fixed

Digitized by Google

position by one of two projections on the quadrant face. By moving handle 33 to the next stop, studs 20 20′, change

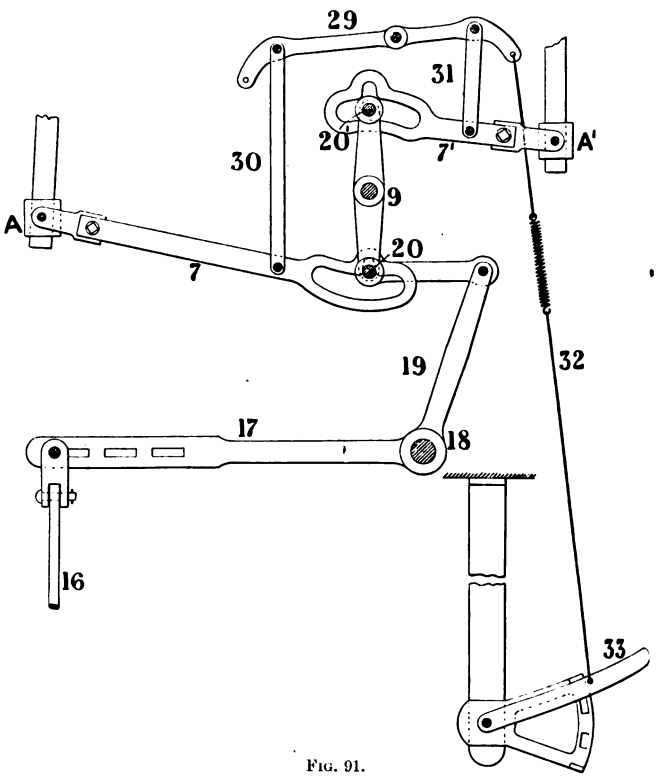

Fig. 91.

places, cylinder arm 7′ begins to act, and 7 becomes stationary.

Double-shed Machine

In weaving such fabrics as swivels that require two picks of weft to be placed one above the other, instead of side by

Digitized by Google

side, attempts have been made to pass both wefts through the warp simultaneously. To accomplish which two sheds must be formed—the lower one to receive ground material, and the upper for swivel weft.

Messrs. Howarth and Pearson, in 1868, constructed a machine that saves paper to a slight extent, but saves time

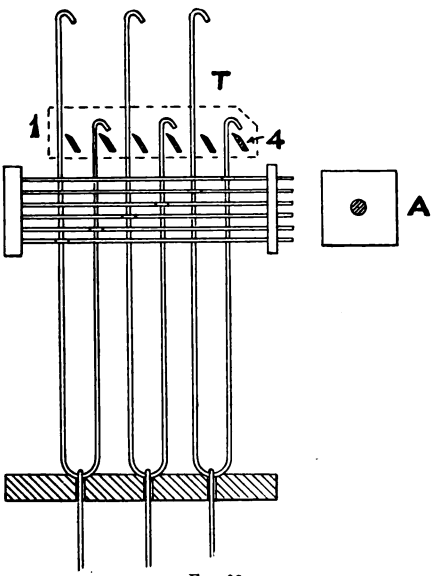

FIG. 92.

to a much greater extent. It has a double hook *t* (Fig. 92), one leg being longer than the other by the depth of a swivel shed. As each leg is moved by a separate needle, one can be vertical whilst the other is inclined; but the effective compass of this Jacquard is only equal to half the needles it contains, for the swivel pattern must be cut upon odd-numbered rows, and the ground pattern upon even ones of each card. Griffe block 1 contains all blades 4, so, as it

Digitized by Google

ascends, all short vertical legs—namely, odd-numbered hooks—will be first taken, and assuming some short ones are pushed back, all long vertical legs will be caught later.

A single shed is formed by a long, and a double one by a short leg. Motion given to cylinder *a* must be independent of the griffe, or hooks could not be held back long enough to allow it to pass without lifting them. This machine makes imperfect cloth, because ground weft floats under the figure in precisely the same manner as swivel weft.

Two Patterns on one Set of Cards

Cards are sometimes saved by cutting two patterns on one set in such a manner that a pick of the first pattern is cut on odd-numbered rows, and one of the second on even-numbered rows of every card. Such a Jacquard only differs from one of the ordinary description in having alternate rows of holes in the needle board empty, and a motion attached to the cylinder or cylinders resembling that for a decked dobby (see p. 88).

After weaving as many repeats of pattern 1 as are required, the cylinder lever is moved and pattern 2 brought to face the needles. If eight repeats of one and two repeats of the other are necessary, a saving results in using one repeat of cards, doubled in width, but of the usual length, instead of $8 + 2 = 10$ repeats of single width cards. Only patterns containing an equal number of picks, or when one is a multiple of the other, can be produced on this plan.

Compound Machines

Certain compound fabrics that depend upon colour for figured effects are frequently made from Jacquards with

Digitized by Google

two sets of hooks to one set of needles and cards. All hooks moved by griffe z (Fig. 93) are placed in succeeding

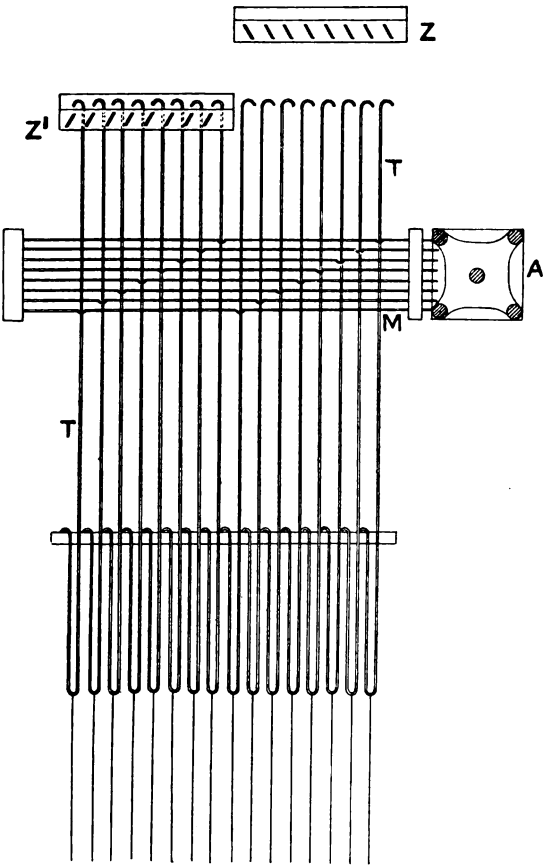

FIG. 93.

rows to face the needle points, and lift when vertical; whilst all rows of hooks moved by z' face the spring box,

Digitized by Google

and are left down when vertical; z governs warp of one colour, z' lifts threads differing in colour from the first. Cylinder and griffes have separate actions and only move once in two picks, thus a presses a card against needles m and griffe z rises with, say, blue warp threads when hooks t are vertical, and a pick of white weft is put between white warp threads in plain or twill order; but the latter are lifted independently of the Jacquard, as explained on p. 202, then z drops, and z' goes up with white warp threads occupying positions corresponding with those of blue warp previously left down by z, and blue weft is driven through a plain or twill blue shed.

During this time card 1 has remained pressed against the needles, but cylinder a now moves out, turns over, moves in, and pushes card 2 against the needles, when the foregoing process is again repeated.

It is an excellent machine for the work it is capable of doing, but its application is necessarily limited.

The Verdol Jacquard

In 1884 M. Verdol invented a very ingenious small gauge machine, in which the selecting needles are placed in zigzag lines and so close together that needles in any two lines at right angles to each other are only $\frac{1}{8}'' \times \frac{1}{16}''$ apart. All are moved by a band of paper about the thickness of ordinary writing-paper, but it is doubled in thickness at both ends and in the middle, where peg-holes are cut to draw it forward.

Three causes militate against the extensive use of this machine in high-speed looms. First, the hygroscopic condition of the atmosphere in weaving sheds which, through lack of uniformity, tends to curl and rumple the paper:

Digitized by Google

a defect, however, that the inventor claims to have overcome. The second and third causes are dust and vibration.

In a machine so closely packed with wire and requiring such exceedingly delicate adjustment, great firmness and freedom from fibrous dust are essential, or the parts will either get clogged or move unsteadily, and imperfections in the fabric will be of frequent occurrence.

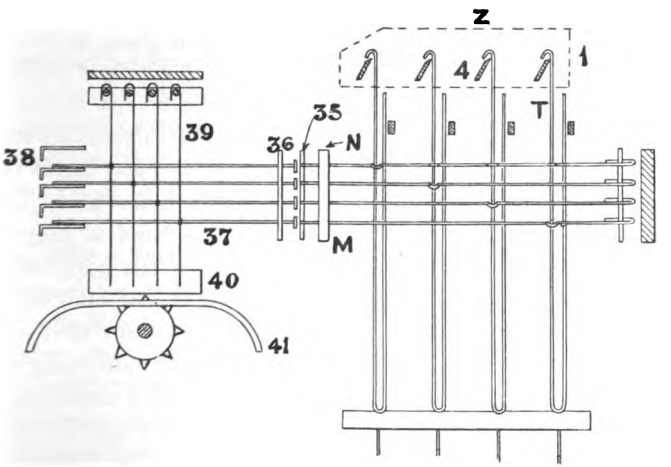

FIG. 94.

A small gauge Jacquard of the ordinary description is employed, complete in every respect up to needle plate *n* (Fig. 94), but beyond that all is new. Instead of cylinder and cards a box is made to slide to and fro before needles *m* ; it contains two plates, 35, 36, both drilled exactly like needle plate *n*, the former to admit the points of *m*, the latter to support horizontal drivers 37 (about 6″ in length), one of which is placed opposite each needle and furnished with a round head to render contact certain. At the

Digitized by Google

opposite end of the box a series of rectangular parallel bars 38 are so secured as to leave room between one and another for the rear ends of drivers 37 to pass between, and each horizontal arm forms a support for all the drivers in one row.

A series of vertical needles 39 little, if any, thicker than rose wire, are suspended by a hook from a slotted grid, in which they are free to rise and fall. All are provided with a coiled eye to support and govern a driver 37. The vertical position is maintained by a plate 40 perforated in zigzag rows to the gauge of paper, and paper plate 41. All needles 39 enter but do not protrude through plate 40, except when the cylinder plate is elevated, in which case the latter gives way and permits needles and paper to touch. Below 40 a curved, perforated brass plate 41 is employed in lieu of cylinder, the paper band is passed between them and rotated by wheels, from the periphery of which pegs project at regular distances and take into peg-holes in the paper. Plate 41 moves vertically through a space of $\frac{3}{16}''$ to $\frac{1}{4}''$ to force up plate 40 and move needles 39 into contact with the paper. A blank lifts a needle and also a driver until the rear end of the latter is against the vertical arm of angle bar 38, but a hole leaves both undisturbed.

As previously stated, all parts of the invention are contained in a frame or box which is now made to advance against the Jacquard needles *m*, and where a driver is lifted against an angle plate its head will push back a needle, and therefore a hook *t* out of the range of griffe *z*; but when any driver is left down, its head will be pushed back by a needle *m*, its straight end will pass between the angle plates, and leave a hook over a griffe bar.

A vertical needle should fall by its own weight, aided

Digitized by Google

in part by the weight of a driver; still, to render sticking impossible, a trap-board is brought down upon the grid to force all level after every lift of the griffe.

If this machine ever replaces ordinary Jacquards, the firms using it must exclude all other makes, or serious complications will arise. For instance, two sets of card-cutting machinery will be required, and that for the Verdol is an elaborate and costly one. Again, four sets of cards may exist for weaving the same pattern, if two are cut for ordinary and two for Verdol's machines, the looms fitted with either may be required for a different class of work, two sets of cards will be idle, and yet a demand for the assumed pattern would necessitate cutting an extra set to suit the looms available.

The Bessbrook Jacquard

The difficulty and cost of placing Jacquards of sufficient capacity over looms in which large patterns are to be made from fine, closely-placed material, have been experienced ever since the machine was introduced, and are felt with ever-increasing force at the present time when expensive patterns have such a short run. Many inventors have turned their attention to the problem; some have attacked it from the harness side, whilst others have remodelled the machine, but always with a view to reducing cards. It is with the latter class of inventions we have more especial concern at present.

In 1859 Shields invented a machine that was capable of lifting or leaving down warp, irrespective of the perforations in a card, also of making one card serve for two or more picks. The idea has been developed by many succeeding inventors, of whom Barcroft, in 1869, and Tschörner and Wein, in 1887-88, may be mentioned.

Digitized by Google

As it is impossible here to follow the machine through all its various stages of development, one illustration of the principle must suffice, and Barcroft's or the "Bessbrook" will be taken for the purpose.

It is applicable to all fabrics, in which a twill, satin, or some regular system of interlacing is used, to bind the entire fabric together.

The action of cards alone is to lift all warp threads where figure is formed, and leave all down where ground is required; but the fabric in many places would be so loosely interwoven as scarcely to hold together. Parts are added to prevent one thread from each repeat of the figure binding pattern from rising, and to lift one thread from each repeat of the ground binding. This, however, is not sufficient; one needle must actuate two, three, or more hooks, and one card must suffice for two, three, or more picks. By way of illustrating the advantage of a twilling machine over an ordinary Jacquard, we will assume both to have 400 needles, and the twilling machine three hooks to one needle, and three picks to one card. Then $400 \times 3 = 1200$ warp threads to one repeat, which equals three 400 needle Jacquards; these would require three cards to one pick, instead of three picks to one card, or nine times as many as a Bessbrook. The latter has other advantages; for instance, a considerable alteration in picks per inch, or in the closeness of warp, would distort an ordinary pattern, but here the first-named alteration would merely require more, or fewer, picks to each card in proportion to the alteration; thus, instead of three picks to a card, two or four could be inserted, or again, two for one, and three for the next card. In warp, two hooks can be moved by one needle, three by another, or four by all; but it must be remembered that the greater the number of picks to a

Digitized by Google

card, and hooks to a needle, the more irregular the outline of a figure becomes.

There are, or have been, several modifications of the Bessbrook, but generally the leading idea has been to lift a hook at will from two points, and move one or more griffe bars from an inclined to a vertical position for each

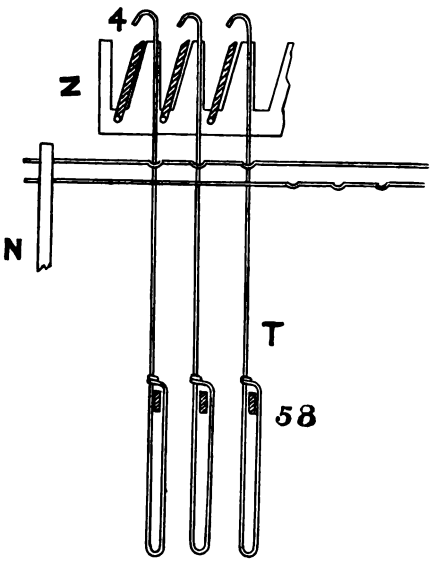

FIG. 95.

pick of weft, so that a vertical blade will leave down all hooks in that row, and cause all to be lifted in the next, no matter whether a card has acted upon them or not; also an inclined blade will sometimes lift all hooks in a row, although the heads of some are pushed back; at other times, only vertical hooks will rise.

The inventor accomplishes this as follows:—Every hook *t* (Fig. 95) is 15″ long, and has a closed loop formed at the

Digitized by Google

bottom by bending the wire back, and then twisting the end round the long leg; the length of loop must, at least, equal the depth of a shed, say 4″. When not in action all the hooks in each row are supported by a bar 58, which passes through the loops and rests in a slotted framing 59 (Fig. 96).

Attached to opposite ends of every bar are two thick hooks 60, that rise to the level of ordinary hooks, and are in turn supported and held back from griffe *z* by needles

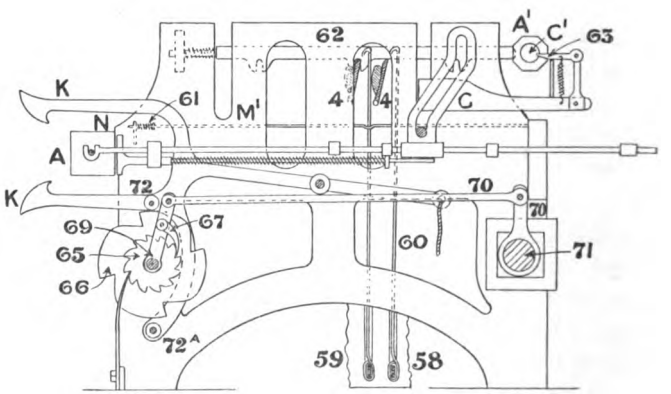

FIG. 96.

m'. These needles are 16″ long, and have spirals threaded upon them to rest against needle plate *n*, and collar 61.

Every blade 4 is free to turn from an inclined to a vertical position on a pin that enters the griffe frame, and they are moved in twos or more by flat bars 62, which have notched projections on the under side; they are rounded at one end, to receive a spiral spring, and passed through a perforated plate, but are left flat at the other end to work in a grid. Immediately in front of the flat ends a pegged cylinder *a'* is placed parallel with cylinder *a*, but at the

Digitized by Google

opposite end of the Jacquard; it is fixed in bearings in the griffe block, and moves up and down as the griffe rises and falls. It is rotated by a finger 63 that is free to be lifted, but cannot be depressed. When the lantern *c'* strikes the end of finger 63, it is moved partly round to bring a fresh set of pegs against the ends of twilling bars 62, and thus place some blades vertical and out of reach of their hooks. In doing this two or more twilling hooks 60, immediately in front of vertical blades, are pushed upon their griffe by curved pieces of metal attached to the blade exactly opposite the hooks.

The cylinder *a* is moved by swan necks *g*, bolted upon side shafts which give it a sliding motion in the usual manner, but the double catch *k* does not turn it every pick, for *k* is operated by a ratchet 65 and tappet 66; both being compounded and fitted upon a stud. The ratchet is moved one tooth each pick by a pawl 67 (held in the teeth of ratchet 65 by a spring). The pawl is fulcrumed on an arm 69, which is in turn centred upon the tappet stud, and con nected by rod and lever 70 to the vibrating griffe shaft 71.

A bowl 72 is secured to the lower leg of catch *k*, and rests upon the tappet 66. A full part of the latter holds the catch from the lantern of cylinder *a* and prevents it from turning, but a hollow part brings them in contact, therefore the shape of tappet 66, and the number of teeth in ratchet 65, determine how many times the same card shall be presented to the needles.

A pendent arm from catch *k* also carries a bowl 72^a, which is controlled by tappet 66, in case the cylinder is worked backwards.

When barrel *a'* is pegged to produce the desired pattern, twilling bars 62 will turn two or more griffe blades vertical, and push corresponding twilling hooks over slanting blades.

Digitized by Google

Cylinder *a* presses a card against the needles, and griffe *z* rises. It will lift all vertical hooks except in those rows where the blades are turned up, and also all hooks in rows where twilling hooks 60 have been pushed in range of the griffe. The latter are lifted by bars 58 from the bottom loops. A pick is passed through the shed, griffe *z* descends, barrel *a'* is turned, other twilling bars and hooks are moved, the same card is pressed against the needles, and the griffe goes up with a fresh set of hooks, although the card has not been changed.

The number of rows of hooks and needles depend upon the number of picks to a repeat of the binding pattern, and upon the number of hooks that are governed by one needle.

Electric Jacquard

So long ago as 1860 Bonelli substituted electricity for cards to move needles and hooks in a Jacquard. A few years later he attempted to improve his former application: but since both efforts proved unsuccessful, inventors have turned their attention to more promising subjects.

It is an easy matter to see why Bonelli's inventions failed, and to put a finger upon their weak spots. Electricity was then little understood, and less used. Every manufacturer who wished to employ these inventions was compelled to generate electricity upon his own premises: but, perhaps, the greatest deterring cause was the complex nature of the machine.

An ordinary 400 needle Jacquard had the following additional parts:—Namely, 400 armatures, 400 electro-magnets, 400 metal feelers, 800 covered wires, a battery and suitable framing to sustain and put all in operation.

Since 1860 electrical science has made enormous

Digitized by Google

progress. Our manufacturing centres are now within measurable distance of the time when electric currents will be supplied as readily as gas and water. This may, and probably will, put quite a new complexion upon the problem, and have the effect of again calling the attention of some able electrician to the subject, who, under more favourable conditions, may reasonably hope for more satisfactory results.

Instead of cards, Bonelli employs a thin sheet of metal 48 (Fig. 97), and paints the design upon its surface with an insulating varnish. The sheet is passed round cylinder *a*, and retained upon its surface by pegs *b*; both are rotated at a suitable speed by wheel-work and pawls.

Immediately above sheet 48 a number of thin vertical plates or feelers 49, each formed with a point at the base, are placed in one line and parallel with each other, but separated by the teeth of insulating combs 50. They are severally connected by means of wires to an electro-magnet 51, which is composed of soft iron covered with a coil of wire. The insulated wires of the coils of contiguous magnets are wound in opposite directions, and the magnets are arranged in such a manner that the positive pole of one shall be next the negative pole of its neighbour. This is done to prevent induction.

All magnets are placed in a stationary frame in horizontal rows, and in tiers, the number in a row and the number of tiers are determined by the number and arrangement of needles in the Jacquard, for there must be one magnet facing each needle. In front of the magnets a sliding frame 52 is mounted on rollers; it is composed of one cross and two vertical pieces, and motion is given to it by a swan neck in griffe block 1. Both plates are drilled to the gauge of needle board *n*, and support a set of double-headed,

Digitized by Google

horizontal armatures 53, so that one shall always be opposite the ends of a needle and a magnet. All move back-

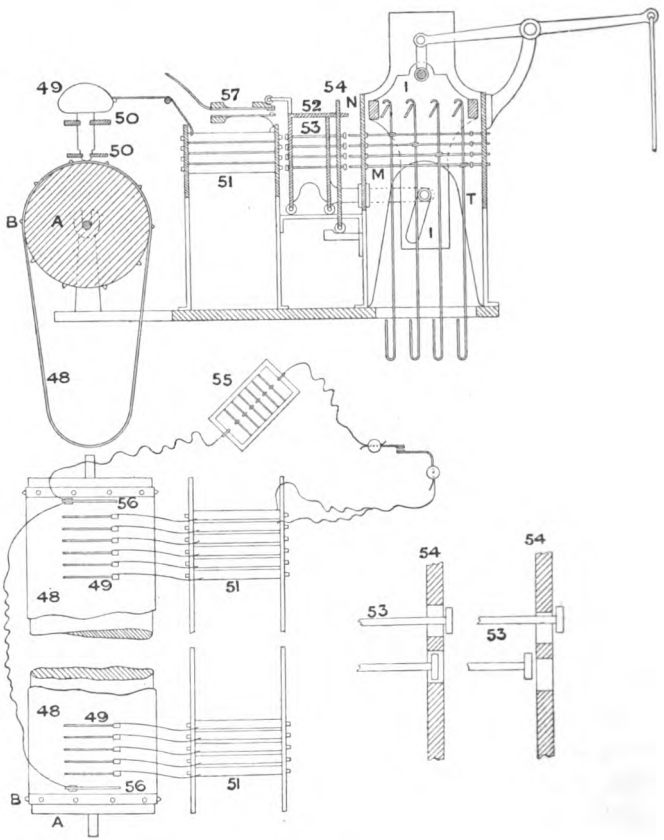

FIG. 97.

wards and forwards for each pick of weft in the direction of their axes. A third perforated vertical plate 54 is drilled with holes large enough to take an armature head freely;

Digitized by Google

it is placed slightly in advance of, and moves with, the sliding frame. When the latter is farthest from the points of needles *m*, the bowls which support locking plate 54 are upon the upper surface of an inclined plane, and the centres of its perforations exactly coincide with the centres of all armatures 53 and needles *m*; but as the frame advances, plate 54 moves down the incline until its solid parts are opposite the upper halves of armatures' heads, thus locking all either inside or outside the plate; if inside, a needle *m* will enter a hole in 54, and leave a hook *t* vertical; but if outside, the head of 53 will come in contact with its needle, and push back needle and hook together.

One end of the wire coils of every magnet communicates with a common wire which ends at one of the poles of a battery 55; the other end, as previously mentioned, is attached to a feeler 49. The second pole of the battery is connected with the pattern sheet by means of plates 56, which bear upon its edges.

The current is broken every time the pattern plate is brought into, or taken out of, contact with feelers 49, to prevent electric sparks from injuring it. Circuit-breaker 57 consists of two spring plates, one placed above the other, but at a short distance apart, and the current must pass through both to complete the circuit; this cannot be done until the plates are in contact. The upper one has an inclined surface, upon which a bowl, fitted at the extremity of an arm on frame 52, rolls as the latter moves towards magnets 51, to press the upper upon the lower plate, and so complete the circuit.

The operation is as follows:—The thin metal feelers 49 are dropped into contact with the pattern sheet, and where feelers touch the metal of the pattern plate the electric circuit is complete, and magnets 51 are magnetised. They

Digitized by Google

act on armatures 53 to prevent them moving forward with frame 52, and draw their heads inside plate 54. On the contrary, those feelers 49 that rest upon the varnish of the pattern plate break the electric circuit; and consequently, when frame 52 moves forward, it will carry with it all armatures that face dead magnets, and their heads will be outside, instead of inside, locking plate 54, and blanks will be presented to needles in one case, holes in the other. Feelers 49 rise, the pattern sheet is rotated, and the operations are again repeated.

Patterns of two or more colours can be produced by superposing successive metal plates representing different colours, and insulating them by layers of varnish.

Or patterns may be composed of movable metal types, set up in the same way as printing types.

Machine Lifts

The griffe of a single lift Jacquard is generally actuated by a crank, or an eccentric, fixed upon the main driving shaft, and connected by a long rod to the griffe lever above the machine.

Since such an arrangement of parts does not admit of a dwell long enough to allow a shuttle to move across the loom, it becomes necessary to pick before the griffe has reached its highest point. Thus, if the lifting crank is 45° in advance of its bottom centre as a shuttle enters the warp, when it reaches a point 45° past that centre, the shed, although closing rapidly, will be just as deep as where the shuttle entered. But at the best, little more than $\frac{1}{4}$ of a pick is available for dwell.

By securing the upper end of a short connecting rod to a lever that is placed at right angles with the crank

Digitized by Google

shaft, and swings from its rear end at a height of from 12″ to 18″ above the crank centre, and then connecting it with the griffe lever by means of a second rod, a considerable additional pause will be obtained. See Beating Up, p. 344, for the effect of shortening a connecting rod.

Although the last-named method is frequently resorted to, cams are in most cases preferable, for they can be shaped to impart any length of pause and any velocity of rise and fall.

For certain compound and other fabrics in which one card equals two or more picks, cams, either negative or positive, are indispensable.

Fig. 98 shows the construction of a cam suitable for a fabric having 4 picks to 1 card, during the insertion of which the Jacquard griffe remains stationary at the top, but between picks 4 and 5 it sinks, then, after a fresh selection of hooks has been made, it rises again in time for pick 5.

Let it be assumed that a space of 3″ exists between centre of cam stud and thin part of cam, also that the lift is 3″. If its dwell is $\frac{1}{3}$ of a pick, the total time for making changes is $\frac{2}{3}$ of a pick; this time may be divided into twelve parts as follows:—Four for sinking the griffe, two for making changes, and six for lifting. The cam is further assumed to act on a treadle bowl 2″ in diameter.

Describe circle *a* equal in radius to the smallest distance between centre and centre of cam stud and friction bowl—namely, 3″+1″=4″. Add the lift of cam to first radius and describe circle *b* = 7″ radius. Divide circles *a*, *b* by radial lines 1, 2, 3, 4, into four equal parts, each part to represent 1 pick. Next divide any space, say 4 to 1, into three equal parts, and use 4*c* as dwell. Divide the

Digitized by Google

remaining $\frac{2}{3}$ into twelve equal parts, take the first four, *c*, *d*, for sinking the griffe, allow the two following parts, *d*, *e*, for making changes, and employ the remaining six, *e* to 1, in lifting the griffe.

Divide *a*, *b* into any number of unequal parts, as

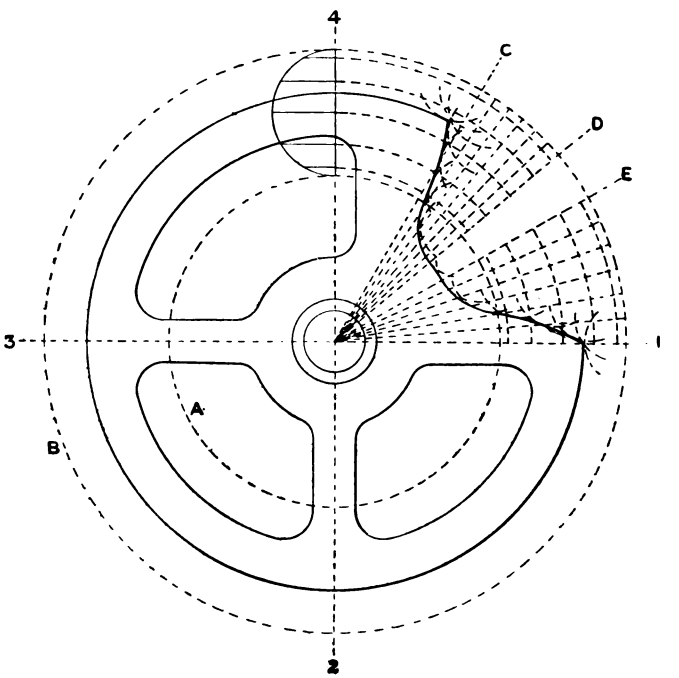

FIG. 98.

explained in Tappet Shedding, p. 40 (here six are taken), then subdivide *c*, *d*, *e*1, respectively into the same number of equal parts, and use successive points of intersection as centres round which the friction bowl circles are to be described. Trace a thick line that touches the periphery

Digitized by Google

of each bowl circle, and continue it round divisions 1, 2, 3, 4*c*, with compasses.

Cams of this description are generally driven by wheel-work from the crank shaft end, and the cam treadle is connected with the lifting rod.

Double lift Jacquards require a double-throw crank fixing on the bottom loom shaft, and set with its pins in one vertical plane when the loom cranks are on their bottom centres. When the latter are on their top centres, the Jacquard cranks are horizontal, and as a consequence the shed is half-open, but at the beating-up point the griffes are rapidly forming a shed for the following pick.

PART VII

THE FIGURING HARNESS

Having to some extent dealt with the selecting apparatus used to produce elaborate figured effects in fabrics, we have now to determine how the connections must be made between the Jacquard and the harness, to develop a design in the most economical manner.

It has been already mentioned that this harness forms no part of Jacquard's invention, and that it existed, just as it is to-day, centuries before his birth. It consists of couplings, comber board, and mounting thread. A coupling includes a lingoe, a mail, and two loops of linen thread.

A lingoe is a piece of round wire, or lead, flattened and punched at one end to allow the lower loop of the coupling to pass through. It varies in weight from $\frac{1}{4}$ to $\frac{1}{40}$ of a pound, but for average cotton goods $\frac{1}{20}$ to $\frac{1}{30}$ of a pound is usual. It is simply a dead weight hanging at

Digitized by Google

the end of each coupling to keep the twine in tension. The lower loop connects lingoe and mail, and must be long enough to permit the Jacquard hooks to lift without carrying lingoes amongst warp forming the bottom shed; from 6″ to 8″ is common.

Mails are made of brass, copper, steel, or glass. Some have from two to five eyes for warp, but as a rule they contain three holes, a small one near each end, and a larger one in the centre. Both outer holes receive coupling twine, and the middle one is reserved for warp.

An upper loop varies in length according as the connection with mounting thread is to be made above or below the comber board. In the former 12½″ to 16″ are general, in the latter 6″ to 9″.

A comber board is usually a perforated piece of wood, employed to keep the harness threads separate, and hold each mail exactly opposite the particular dent in the reed through which its warp thread has to pass, but there are three kinds:—

(*a*) Solid wood, long enough to reach across the loom, from ¾″ to 1½″ thick, and of sufficient width to take as many holes as are to be drilled in one row. The use of a solid board is optional in some, but essential in certain classes of double fabrics.

(*b*) Boards composed of slips ¼″ to $\frac{5}{16}$″ thick, and from 1″ to 3″ long, and all held together in a grooved frame, are in most extensive use. For general work they possess advantages over other makes, as they are capable of adjustment, before tying up, and also to a slight extent afterwards, when by pushing the slips apart and holding them out with plugs or strips of wood, a harness can be made to suit a coarser and wider reed, provided the alteration does not necessitate a movement of more than

Digitized by Google

1″ to 1½″ on the entire width. An objection to this plan is that outside mails are lifted above the level of those at or near the middle of a board. But the greatest advantage of slips is seen when bordered fabrics are made in various widths from the same pattern, by adding to or taking from the number of middle repeats. This can be readily done when supplementary boards are placed in a higher plane than the ordinary board, and all are capable of lateral adjustment. Border twine is passed through a hole in both top and bottom boards, and after removing, or adding, the required number of centre repeats, the upper board is moved in an opposite direction to the bottom border slips until border mails fall into the same plane as middle mails. Or the same effect may be produced, without the objectionable friction caused by the foregoing, if decked mails are employed for the border portions of a harness, and, after adjusting the middle repeats, border threads are drawn through those eyes that are level with the centre portion.

(*c*) A reed pitched to the fineness of harness required, and divided into sections by iron rods placed at right angles to the dents and held in position by a broad piece of notched wood at each end, and thinner pieces similarly notched are disposed at intervals along the reed; when all are firmly secured, harness twines are passed between the rods and dents.

It is simplest and best, when convenient, to drill as many holes in one row from back to front of a board as there are needles in a vertical row of the Jacquard; but in many cases it is impossible to follow this rule, for some fabrics are so fine that boards are required with twenty-four holes to a row, still they should not be deeper than is absolutely necessary, or bad shedding will result from warp in a

Digitized by Google

back row not being lifted as high where the shuttle crosses as in a front row; also from the chafing and sticking of threads as they rise and fall.

If one thread is passed through each mail, it must be a rule to drill as many holes on a lineal inch of comber board as there are threads in 1″ of the reed. Thus, assuming a reed contains 80 threads per inch, and a Jacquard 8 needles in a row, the harness will be straight and best if the board has 10 rows, each 8 deep on 1″, and the second row forms a zigzag with the first. If a finer board is used, surplus holes should be left at regular intervals, but for preference in full rows at every place. With 100 threads per inch in a reed, and needles in rows of 12, the board should have 100 holes per inch, or 25 rows of 12 on 3″.

A comber board is fixed in a horizontal position upon brackets bolted to the loom framing; it should be from 9″ to 12″ above mails when couplings pass through holes in the board, and from 12″ to 16″ above them when mounting threads pass through the holes. (A low board gives steadiness by preventing mails from swinging.) It must be parallel with, and have its front edge about ½″ behind the slay cap when the driving cranks are on their back centres.

A mounting thread is used to connect upper loops of couplings with tail cords of a Jacquard. Linen yarn is employed for this purpose, the thickness and structure of which vary greatly, and depend upon the severity of the work it has to perform. From $3/60^s$ to $15/30^s$ is found on different looms making light and heavy fabrics. In length there is also a great difference, principally due to width of loom, but also in a smaller degree to the position of the Jacquard. Narrow looms should have a harness at least 4′·6″ from mail to bottom of hook, but 9″ to 12″

Digitized by Google

longer is to be preferred, whilst a loom with a reed space of 160″ requires 9′·0″ or more. If the long sides of Jacquard and comber board are parallel, a harness can be from 6″ to 12″ shorter than when the short side of one and the long side of the other face in one direction, because in the former all mounting threads are straight, in the latter they are twisted.

Jacquards are sometimes placed on the top framing of a loom, at other times they are suspended from the shed roof; but they invariably work best when supported upon iron girders that rest in shoes cast with the pillars, all longitudinal girders being bound together by cross ones, and machine stands bolted upon them where necessary. The machine is then entirely free from the loom, and vibration is reduced to a minimum. Whereas, when standing upon a loom, the vibration of one is added to that of the other. Even when suspended from the roof timbers on a gantry there is a greater liability to vibrate than with specially constructed girders.

A Jacquard should be capable of vertical adjustment, so in case of error mails may be brought to their true height. This is usually accomplished by tapping holes in the machine feet, and inserting setting screws which abut against a solid bed.

If a machine is fixed for cards to fall over warp or fabric the harness is straight, and there is a minimum of friction; hence it will last longer and may be shorter than any other type. Again, cards are not liable to fall into either driving strap or wheels, but in some cases light is reduced where light is most wanted. If cards fall over one end of a loom the harness must be twisted, and friction and wear are increased. Local circumstances, however, help to determine the position of a machine, such as space for

Digitized by Google

cards, light for the weaver, and head-room for the lifting tackle. These and many other things can only be dealt with on the spot.

Before beginning to tie a harness, the exact position a machine is to occupy must be determined. If one machine only is to be used, a plummet line tied to the centre hook should hang immediately over the comber-board centre. If two or more machines are necessary, set them as close together as possible, with the centre of space between them over the centre of board.

Building a Harness

There are several ways of building a harness, three of which will be described—namely, single thread tied above the board, single thread tied below the board, and double thread warped above the board.

Mounting threads are first warped to the required length, with an allowance for waste in tying, say 3″ to 4″, upon a board in which four stout wires are driven, or better still, four pins bolted into a wooden or iron rail *a* (Fig. 99), the last one, *e*, to be adjustable by inserting it in a long slot, and when far enough away from pin *b*, to give a proper length of thread, it is made fast. The twine is drawn from a horizontal warping bobbin that is free to turn, and tied upon pin *e*, whence it is taken over and under *d*, *c*, round *b*, back again over and under *c*, *d*, forward to *e*, and this order is continued until a sufficient number of mounting threads are obtained. A cord is pushed through the openings made by pins *c*, *d*, to hold all in their proper places, and enable them to be drawn away without entanglement. They are then cut at *e*, tied together, and removed from the pegs. Assuming that six repeats of a

Digitized by Google

straight pattern are needed to make up the width of fabric, three of the doubled threads must be tied or hooked to each neck cord in the machine at a point from 8″ to 9″ in single necks, and from 11″ to 12″ in double necks below the bottom of hooks. But as these threads will be widely separated in the comber board, there will be a chance of falling threads hooking into rising ones when at work; hence it is usual to tie a knot on each bunch from 3½″ to 4″ below the point of connection with neck cords. All such knots are tied in the following manner, to fall in a straight line across the harness:—Two pins are driven into a piece

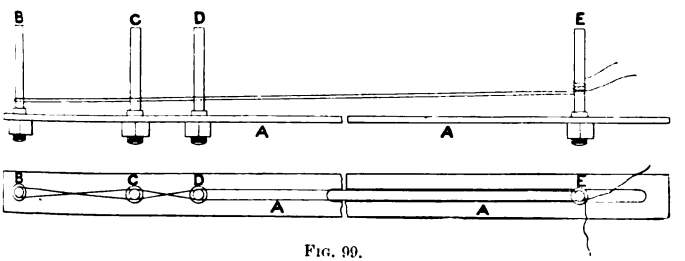

FIG. 99.

of wood 3½″ to 4″ apart, a knot is loosely tied upon all threads that form one set, one pin is passed through the looped ends, and the other through the centre of knot. After a convenient number of knots have been made, they are slipped one by one from the pin and pulled tight. Mounting threads are then ready to be connected to the machine, which may be done before it is put into position, or after, as may seem most desirable.

Two building rods long enough to reach across the loom are employed; they vary from 2″ to 6″ in depth, sections of which are shown dimensioned in Fig. 100. The lower one *a* is passed through all bottom loops of couplings *b* to support them until they are tied up, and the upper rod *c*

Digitized by Google

goes through all top loops *d*. Rod *c* must be fixed under the centre of the comber board, and perfectly horizontal, with its lower edge at such a height that mails *f*, when drawn close up to it, will be in their working positions—namely, on a level with the bottom shed line, or from $1\frac{1}{2}$″ to 2″ below a cord stretched round breast beam and back rest; such cord should be approximately half the depth of shed to be formed above the mails. Both rods are supported upon adjustable brackets bolted on the loom ends, or by a wooden frame having two upper and two lower adjusting screws at each end. After being secured at their proper height, and levelled with a spirit-level, the comber board is marked off into patterns by lead lines upon its edges, and if there are surplus holes a pencil is drawn across them. Filling is next proceeded with, which consists in drawing the upper loops of couplings *d* through successive holes in the comber board. This is in turn followed by the actual operation of building, or connecting Jacquard and couplings.

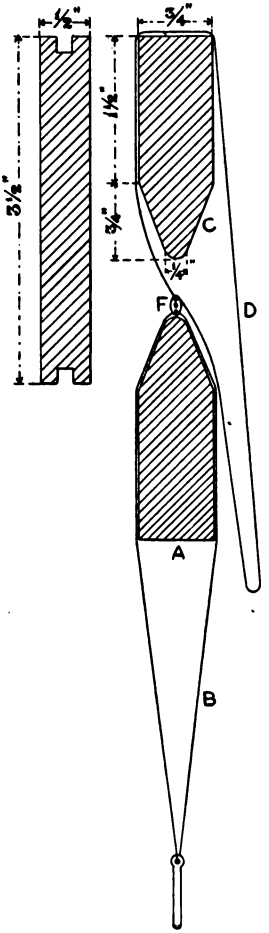

FIG. 100.

If a machine is fixed to let the cards fall either over

Digitized by Google

warp or fabric, all hooks in one long row are first connected with couplings in one row lengthwise of the board; but if cards fall off at one side of a loom the hooks in number one short row are first tied to couplings in the first short row of the board.

When facing a Jacquard cylinder, the leading hook is number one of the back row on the left side. This hook, if cards fall over warp, must be connected to number one coupling in the front row of holes on the right side of loom. If cards fall over the fabric, connect leading hook and first coupling in back row of holes at left side of board, but this will reverse the direction of any diagonal line in a pattern if compared with the former, still, by lacing cards backwards, the twill will run in its proper direction. If cards fall at the right side of loom, connect leading hook with first coupling in the front row of holes at the left side; and if cards fall at the left side, leading hook governs first coupling in back row on the right.

A coupling knot is pulled up to within an inch of the top, then a mounting thread is passed through the loop; its mail is drawn tight against rod *c*, a knot is tied, and the loose end cut off. The second and following threads from the leading hook are tied to the first coupling in the second and succeeding repeats of the pattern, and the same process is followed out with all remaining hooks and mails until the harness is complete.

In Fig. 101 all knots and connections used in a harness of the foregoing description are shown: *a* is on the bottom loop of coupling; *b*, coupling and lingoe; *c*, knot on top loop; *d*, mounting twine and coupling; *e*, knots on bunches of twine; *f*, neck cord and mounting; *g*, neck cord and hook; *h*, a hook for connecting harness and neck cords; that is used when it is probable a new harness will be

Digitized by Google

required to replace an existing one before the first is worn out. In such cases one harness is unhooked and another hooked on.

Jacquard hooks are sometimes specially made to facili-

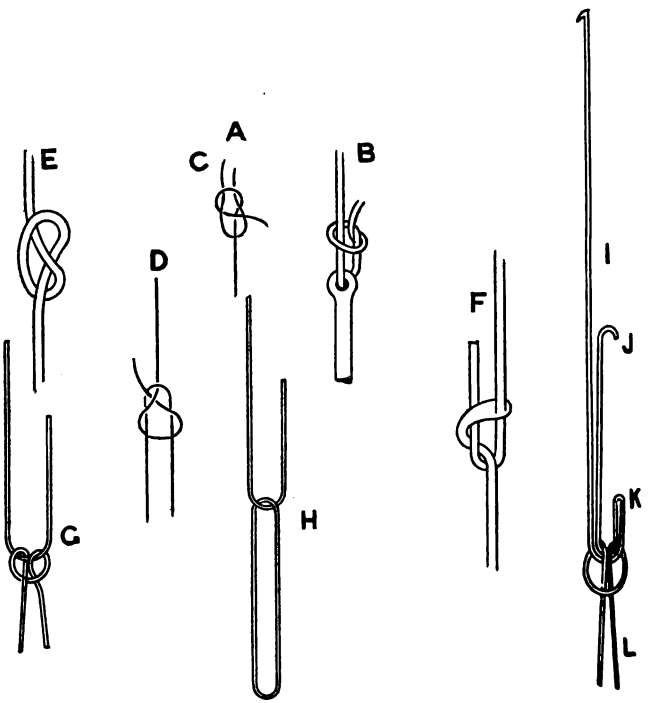

FIG. 101.

tate unhooking such a harness, as shown in Fig. 101. Hook *i* is 17″ long from bottom to top, 6″ from bottom to rack bend *j*, and 1″ from bottom to loop *k*. Neck cord *l* is simply noosed upon *i* and slipped off when not further required.

Digitized by Google

If a harness is to be tied below the comber board, the first process is to warp and knot the mounting thread, then suspend it by its loops from a rod fixed above the comber board, and after dividing the latter into spaces allotted to each repeat of the pattern, draw the twine into its proper holes in the board. Tie the lower ends in bunches to prevent disarrangement, take board and mounting thread to the loom, and proceed to knot the latter in rotation to the neck cords; next fix comber board and levelling rods in position. In a harness of this description there may be four or more levelling rods upon which couplings are threaded, especially if a deep comber board is necessary; assuming one with twenty-four holes to a row is selected, four pairs of rods can be used, or one pair adjusted four times, the back pair to be from $\frac{3}{16}$″ to $\frac{1}{4}$″ higher than the front pair, to assist in holding all warp threads in one line. Mounting threads from the six back rows of holes must then be tied in rotation to couplings on the back pair of rods across the harness, after which the next pair of rods will contain couplings for the following six rows of thread, and so, in like manner, all remaining couplings must be connected.

Tying below a board possesses certain advantages over the former system, especially in fine harnesses in which cards fall over one end of a loom; for in such cases it is next to impossible to tie threads straight in the last few rows of a pattern, owing to the difficulty experienced in passing the fingers between them. Again, there are no knots above a comber board where threads are closest, and where the liability of catching or "riding" is greatest. But all knots must be from 4″ to 5″ below the board, or there would be a risk of lifting some of them into holes, and thus cause sticking. For this reason mails and board must be farther apart than in a harness tied above a board.

Digitized by Google

Warped harnesses are in great repute with many manufacturers. This is partly owing to their neat appearance, partly to the expedition with which they can be built. The system is similar to that of tying above a board up to a certain point. The points of similarity are: Marking the comber board off in sections, filling it with coupling twine, and setting up the levelling rods; but instead of warping and knotting mounting twine, a large bobbin of thread is taken to the loom, suspended from a skewer, and placed opposite the comber board. The end is drawn off, passed through all coupling loops that one hook is to govern, then the end is carried up, and made fast to a tooth of a coarsely pitched comb. These teeth are about $\frac{1}{4}''$ from centre to centre, and 2″ long. They are made of wire driven into a wooden frame which is fixed so that its teeth are in line with the points of attachment to tail cords. The builder then lifts the twine between the two last coupling loops, and hooks it upon a tooth. He proceeds to take up in a similar manner the thread between every pair of loops, and finally cuts it off when the beginning side is reached. Mounting thread also passes between the teeth of a similar comb fixed in the same framing, but $4\frac{1}{4}''$ below the former. This second set of teeth holds all threads of one group close together in a straight line. After pulling both ends of the mounting thread tight to elevate all mails to the levelling rod, they are twisted round the whole bunch immediately above the second comb, and there tied together. By this means an equivalent to a knot previously described is obtained. The process is repeated with all remaining couplings in a longitudinal row (assuming cards are over warp or fabric), and in each case a wire is selected to hold a bunch of twine opposite the tail cord to which it has eventually to be tied.

Digitized by Google

On the completion of a row the bunches are taken off separately, pulled tight to ensure evenness, and each is hitched to its proper neck cord.

Two threads are required for every coupling, but as they are simply passed through a loop, the strength of a warped harness is only equal to that of a single thread harness, although double the length of material has been consumed. In a close harness warping has a tendency to crowd, but in medium and coarse harnesses it is of little moment. The only visible knots are coupling knots.

Dressing a Harness

In manufacturing most fabrics it is necessary to size and varnish a harness to prevent it from fraying and breaking. Harnesses for light goods are sometimes unvarnished throughout, at other times a little dressing is applied for 3″ to 4″ above and below the comber board only. Harnesses for medium goods are frequently sized and varnished near the neck cords and throughout the entire length of couplings, whilst harnesses for heavy goods are sized and varnished from neck cords to lingoes and the couplings are twisted.

Numerous dressings are employed, such as boiled linseed oil, flour paste, bees'-wax and dryers, white wax dissolved in turpentine, and heald varnish.

Boiled oil or white wax is usually rubbed by hand into the harness threads for light goods, but for medium and heavy goods the former is applied with a brush and provides a very serviceable dressing for either, as it leaves the twine smooth and pliant; its chief drawback is that it takes from a week to a fortnight to dry. Heavy dressing consists of flour paste or bees'-wax, which is

Digitized by Google

thoroughly brushed into the harness, and when dry a coat of varnish is applied; the latter should give a hard smooth surface. If couplings are to be twisted it is done by hand, and separately, immediately the dressing is completed. If they are twisted before building takes place, from 1″ to 2″ of their upper loops should be left unsized. Dressing material that gives the smoothest, most pliable, and strongest thread is best for all classes of work.

Defective Shedding

Jacquard shedding is defective in respect to equality of lift, because a top shed forms the arc of a large circle instead of a straight line, and as a consequence centre threads are lifted higher than side threads. This can be readily demonstrated if it is assumed that a harness is 100″ wide, 8′·0″ from mail to hook, 12″ from mail to comber board, and 12″ from hook to knot, where threads begin to separate; then $96 - 24 = 72$″ the length of a vertical thread between knot and board. From a vertical thread in the centre of comber board to a sloping thread at one end of board is 50″, and these threads, together with the board, form a right-angled triangle that has a base of 50″, an altitude of 72″, and a hypothenuse $= \sqrt{72^2 + 50^2} = 87{\cdot}66$″. Now if a machine lifts 4″, the altitude becomes $72 + 4 = 76$″, and the hypothenuse is $\sqrt{76^2 + 50^2} = 90{\cdot}9$″. The difference between one hypothenuse and the other is $90{\cdot}9 - 87{\cdot}66 = 3{\cdot}24$″, therefore the inclined thread only lifts 3·24″, whilst the vertical one lifts 4″. This defect is greatest in a wide, short harness, but it can be minimised where cards fall off at the loom end, by passing glass or steel rods between the long rows of neck cords and fixing them in a frame, so that the rods will bear upon the mounting threads, and prevent them

Digitized by Google

from opening; by this means the angle is a fixed one, and an even shed is obtained, but at a cost of increased friction.

Wide looms, such as the one suggested above, often require heavier lingoes at the sides than at the centre.

Tie-ups

No useful purpose will be served by giving a variety of tie-ups, unless each contains some distinctive feature, for Jacquard ties, like those for healds, are endless. Every manufacturer who understands his business makes them to suit his own special requirements. Care must be taken to select such a number of hooks as will give the greatest number of divisions, for by following this rule scope will be given to the designer to produce varied effects from small patterns. To illustrate this, small numbers are employed, but large ones give similar results. Example:—A 100 machine contains 104 needles, yet more divisions are possible on 96 than on the full number; thus 2, 3, 4, 6, 8, 12, 16, 24, 32, and 48 are all measures of 96, whilst from 104 only 2, 4, 8, 13, 26, and 52 are obtainable, from which it will be inferred that 96 hooks are preferable, in all but special cases, to 104.

Straight Ties

A straight tie forms the basis of all others, and will produce nearly all patterns and fabrics. It may be generally affirmed that it is only departed from in order to effect some economy in cards in one form or another, chiefly by using a small Jacquard to weave large designs. In Fig. 102 a plan is given of a comber board containing an unbroken series of holes, but it is divided by

Digitized by Google

imaginary lines into four sections, each equal to the number of warp threads in a pattern. Threads from

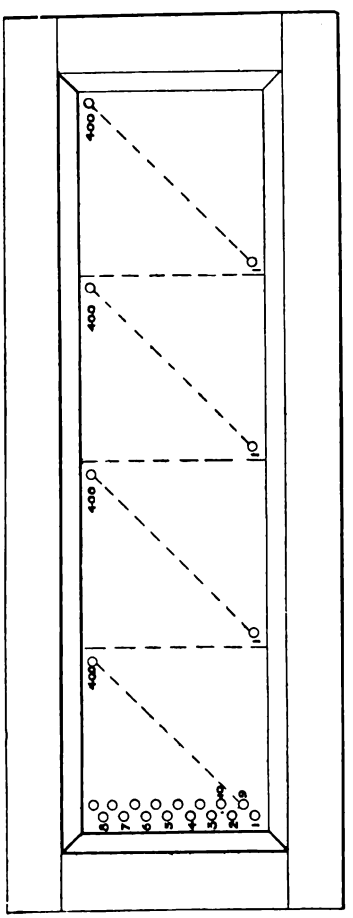

FIG. 102.

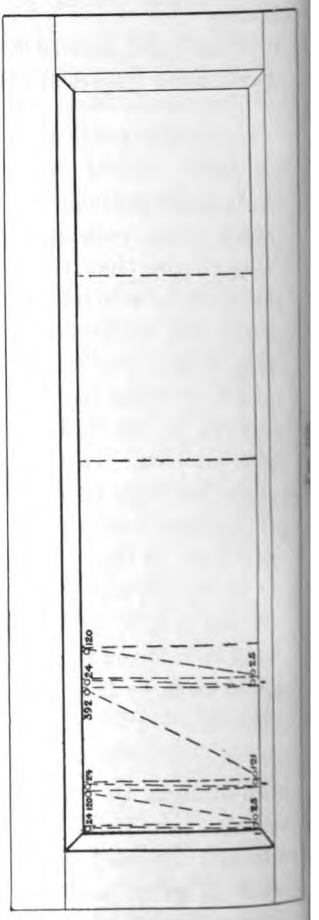

number 1 hook go through number 1 hole in each section, and those from succeeding hooks go through succeeding

Digitized by Google

holes until every one is filled, when the threads from the last hook will be in the back hole of the last row of every pattern, as shown by thread 400. Diagonal marks, beginning at the same part of each section and running in the same direction throughout, indicate a straight tie.

A tie may be straight in the sense that all diagonal lines shown on a plan point in the same direction, and yet when examined, it will be found that one section of a pattern repeats oftener than another, as in Fig. 103, which is intended to produce longitudinal stripes, the narrow ones to be satin, twill, or some small effect, and the wide ones floral or geometrical ornament. Cards are saved by moving three threads in each pattern, with all hooks used to weave the narrow stripes; two threads with those used for the medium stripes; and one thread to each pattern for the wide stripe. There are thus $24+96+24+272+24+96=536$ warp threads to a pattern, but only $24+96+272=392$ hooks are employed to move them.

Centred Ties

Another method of producing large effects from a small card is by adopting a centred tie, which doubles the width of any pattern, but the figure must necessarily possess fewer flowing lines than a straight tie permits of, because one half exactly corresponds with the other. Any number of repeats can be obtained, but two threads are used to each, except for the first and last hooks; hence to find the number of threads to a repeat, two must be deducted from twice the number used, as $400\times 2-2=798$. Fig. 104 is a plan of a centred tie; from 1 to 400 the tie is straight, but from 399 to 1 it is centred, and in leasing it

Digitized by Google

will be necessary to gather threads 399 to 1 in the opposite direction to threads 1 to 400. Or a harness may be leased

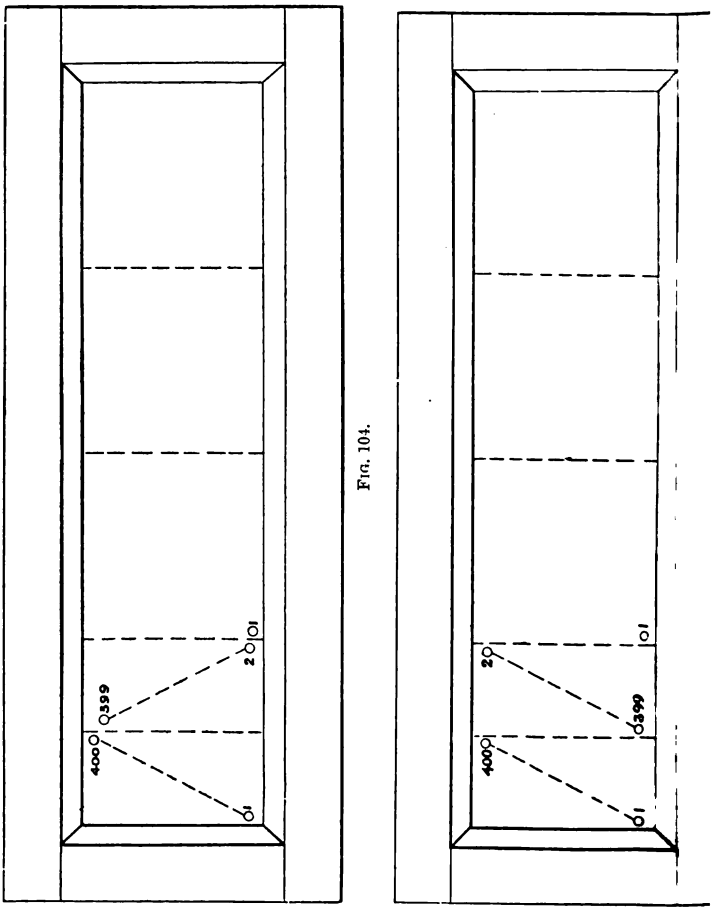

Fig. 104.

straight by centring the tie, as in Fig. 105, where 400 of the first half is in a back row of the board, and 399 of the

Digitized by Google

last half is in the second row from the front. An empty hole is left in one row at every point to keep the courses even in the board.

Mixed Ties

Some ties are straight and centred combined—straight in the body portion, centred in one or both borders; others are centred in the middle of the fabric only; others again have centred borders and middle, with straight portions between, of which it need only be said that there is a danger of two odd or even threads joining at some part. For instance, where the last repeat of middle joins a centred border, all such places produce defects in a fabric, and must be guarded against by omitting the last middle mail, or the first border one.

Compound Ties

Compound ties are found in great variety; they may be straight, centred, or combined at pleasure. The essential difference between compound and single is that a harness is divided into two or more distinct sections, each to control warp of different colour or counts, or produce a different texture. A comber board is divided longitudinally as well as transversely into equal or unequal parts, but each longitudinal section must govern all warp belonging to that division.

Fig. 106 is a plan of an equal compound tie in two sections. The Jacquard is divided equally, and consecutive hooks from 1 to 200 are connected to couplings in section *a*; hooks 201 to 400 are connected to couplings in section *b*.

If, as frequently happens, the sections are in the proportion of two threads in *a* to one in *b*, the board must be

Digitized by Google

divided to correspond, as in Fig. 107, in which the board has 12 holes to a row, and 8 of them form section *a*,

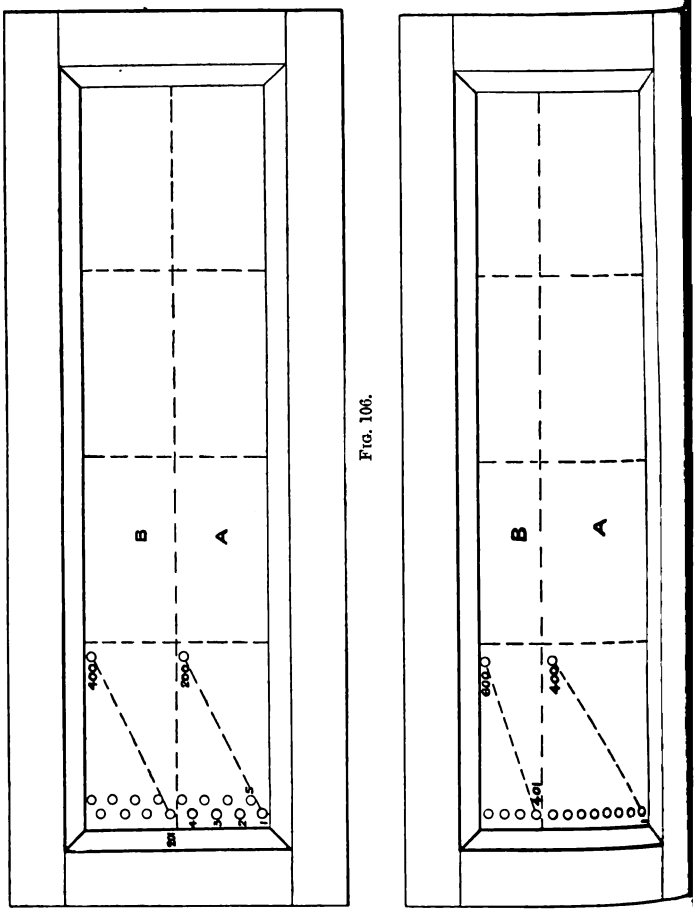

Fig. 106.

whilst the remaining 4 form section *b*. With a 600 Jacquard, 400 hooks may be used for one repeat and 200

Digitized by Google

for the other. Three or four sections can be dealt with in a similar manner. In every case the leasing must bring all mails in their proper places; thus in Fig. 106 the first thread in section *a* must be followed by the first of *b* and alternately throughout; but in Fig. 107 the first of *a* is followed by the first of *b*, then the second and third of *a* are taken before the second of *b*, the fourth and fifth of *a*, and the third of *b*, etc.

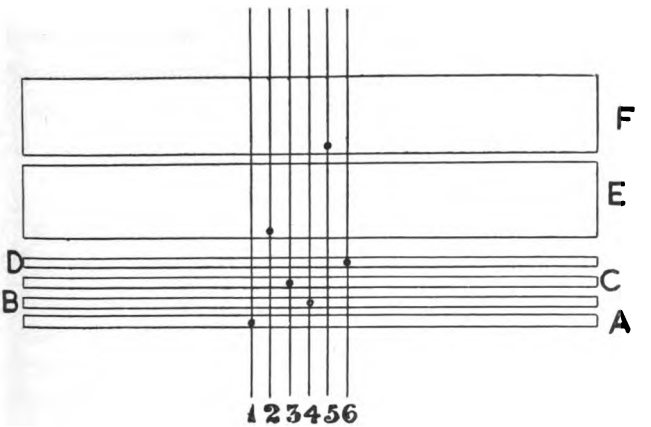

FIG. 108.

Compound ties of the foregoing description cannot be considered as card-savers, but rather as arrangements adopted for convenience, and for reducing the cost of designing in many classes of fabrics. Other compound ties, as compared with straight ones, save cards to the extent of from $\frac{1}{2}$ to $\frac{4}{5}$; they are specially built for weaving double plain or twill fabrics, which are to be stitched together in the loom. Fig. 108 is a plan of a mounting, consisting of 4 shafts *a*, *b*, *c*, *d*, which control all threads of one warp, and two separate solid comber boards *e*, *f*, each contain half the remaining

Digitized by Google

warp. Lines 1 to 6 are warp threads, of these 2 and 5 only belong to the back fabric. Marks at intersecting points denote the position of the eye that each thread is drawn through. Fig. 109 is a plan of the Jacquard tie, arranged for a 400 machine, and numbers 1 to 8 show where mails attached to the first row of hooks are placed. The building differs from any system described in the pages devoted to harness building, in having a knot tied upon every coupling immediately above a board. A knot is too large to pass through a hole, but this does not affect in any way the power of a Jacquard to lift couplings.

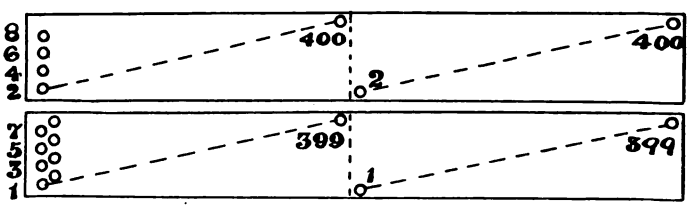

FIG 109.

Shafts and boards are all actuated by tappets independently of the machine. Thus, if shafts *a*, *b* (Fig. 108) lift with the first movement of the griffe, all odd threads of face warp will be raised with some threads of back for the first pick of face weft; *a*, *b* then sink, and *c*, *d* rise without movement in the Jacquard for number 2 pick of face; 3 and 4 picks are of thick weft used as padding to give bulk and weight to the fabric, for both of which shafts *a*, *b*, *c*, *d* are lifted, the machine still remaining stationary, but the griffe must drop before back pick 5 is driven across, and before it rises again comber board *e* is lifted with shafts *a*, *b*, *c*, *d*.

It will be noticed that 5 picks of weft have been inserted into the fabric and only one card employed; 5

Digitized by Google

following picks will be driven home in a similar manner before number 2 card is replaced by number 3, except that for back pick 10, board *f* lifts. Lifting boards *e*, *f*, on picks 5, 10, produce plain cloth with back warp and weft, because all even back threads are on *f*, all odd threads on *e*, and knots being unable to pass through the holes, couplings are lifted with the boards; of the remaining 8 picks, 4 are used for face, 4 for padding. The Jacquard stitches both fabrics together by carrying back warp over face picks, and in so doing produces a figure upon the face fabric through pulling it down in places and allowing it to bulge in others.

Double Equal Plain Cloth Tie

Four solid comber boards are employed to weave double equal plain fabrics that are figured by the application of colour, and by passing one fabric through the other. This system permits of any form of figure and binds both pieces together wherever the colours change places. Each board (Fig. 110) is about 1″ wide and from 1″ to 1½″ deep if four holes form a row; and the top loops of all couplings must be knotted so that the knots will rest upon the boards, and hold the mails in one straight line.

The compound Jacquard described on p. 163 is fixed over the loom, and mounting threads from all hooks that face the cylinder are connected to couplings in one pair of boards; those from hooks that face the spring box govern all couplings in the other pair. A 400 needle machine contains 16 rows of hooks; rows 1 to 8 face needle points, 9 to 16 the heel rack. Fig. 111 shows how these hooks are attached to the couplings for a straight tie. If white warp is drawn through mails on boards 1, 2, by lifting 1

Digitized by Google

all odd threads of white will rise, and board 2 lifts all even threads; boards 3, 4 respectively move odd and even threads of the other colour, say blue. Hence without using a Jacquard two perfect plain fabrics can be woven—one all blue, the other all white—if boards 1 to 4 are lifted

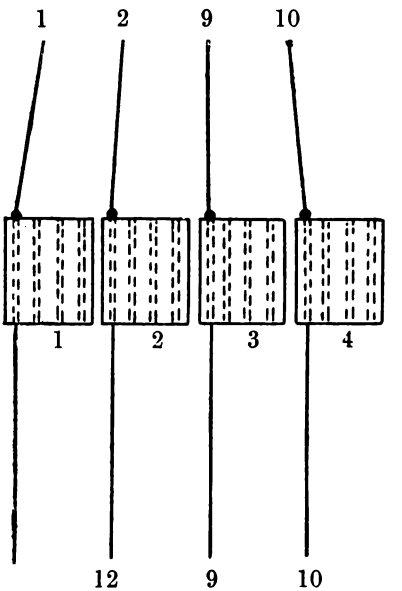

FIG. 110.

correctly. All a Jacquard does is to lift blue warp above white weft where blue is to show on the upper surface, and white warp over blue weft where white is required.

Cards are saved to the extent of from $\frac{1}{2}$ to $\frac{3}{4}$; thus, to reduce them by $\frac{1}{2}$, the first card faces the needles, blue griffe and board 1 lift as white weft is picked across. The same card presses the needles back whilst white griffe and

Digitized by Google

board 3 form a shed for blue weft. Card 2 is turned into position and first blue griffe and board 2, then white griffe and board 4 rise for white and blue wefts. If cards are reduced to ¼ their ordinary number, the cylinder is stationary for 4 picks, the blue griffe rises, boards 1, 2 rise and fall in rotation for two white picks, the blue griffe descends, the white one lifts and boards 3, 4 are operated for 2 blue picks. Card 2 replaces card 1, and the same order of lifting is followed.

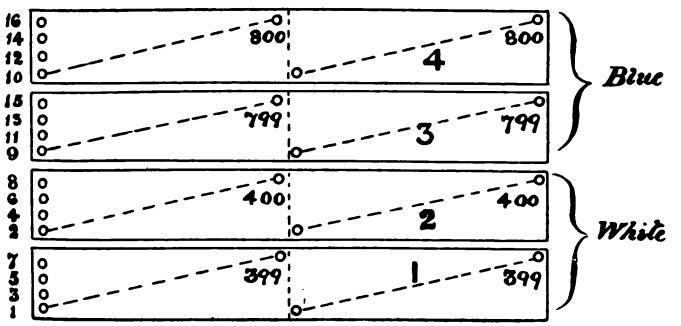

FIG. 111.

SPLIT OR DOUBLE SCALE HARNESS

A harness known as the "Bannister" is in extensive use for weaving wide patterns in a fine reed, from a small Jacquard. It has a comber board (Fig. 112) fixed about 12″ above the warp, and couplings with top loops 16″ long are drawn into it, but all are previously knotted 8″ above the mails at *a*. A strip of wood or metal, *b*, ⅛″ thick by 1¼″ deep, with rounded edges, is pushed between the loops of all couplings in one row of the board and just below the knots. As a consequence, the number of shafts employed

Digitized by Google

corresponds with the number of holes in one row of the

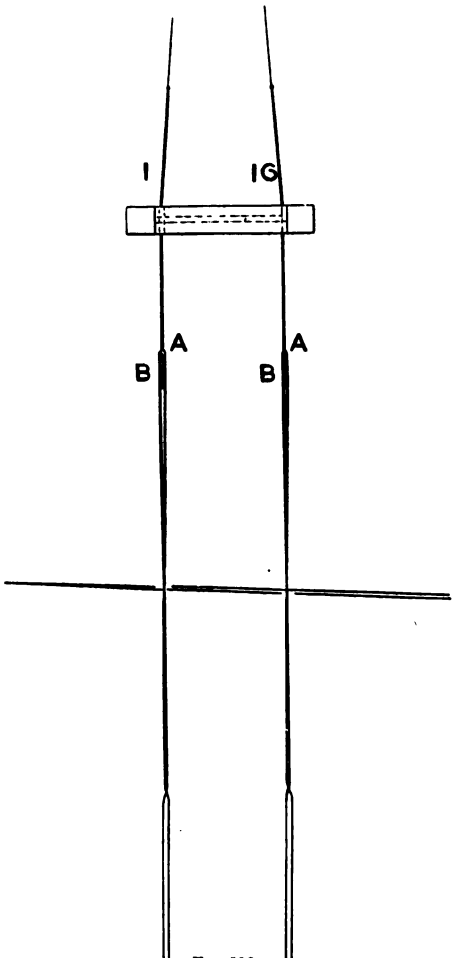

FIG. 112.

board, viz. from 8 to 24. Two, three, or even four

Digitized by Google

consecutive couplings in each repeat are moved by one hook, but they can be lifted separately by the shafts in any desired order in the following manner:—Let it be assumed that 16 holes form one short row, then couplings 1, 2 are tied, or warped, upon the neck cord of number 1 hook; 3, 4 to number 2 hook, etc., or as occasionally happens, couplings 1, 3, 2, 4 are respectively tied to hooks 1, 2; this is done to enable a Jacquard to lift plain cloth sheds without the aid of shafts; but as couplings 1, 2, 3, 4 form part of different longitudinal rows, they are threaded upon four separate shafts which may each be moved in any desired order by spare hooks in the machine.

If cards fall over warp, hooks should be provided near both ends of the cylinder, so that cords from them may pass through the comber board and down to opposite ends of the shafts without crossing. This arrangement also adds equal weight to each end of the griffe.

Cards are only perforated where figure is to be formed, therefore a shaft, or shafts, must lift some warp left down by the Jacquard, for the purpose of interlacing it with weft in the ground portions of the fabric. One card is required for each pick.

The advantages of this harness are: first, a pattern woven from a set of small cards can be doubled, trebled, or quadrupled in width; second, different ground workings can be woven with the same figure if the shafts are moved by spare hooks placed near enough to the cylinder ends to allow short cards to work outside the figuring ones; third, less cost incurred in designing, because only figure requires attention. Its one disadvantage consists in giving a figure a slightly rough, defective outline by moving warp threads in pairs.

From 8 to 24 shafts are often manipulated by attaching

Digitized by Google

two neck cords to every hook, and passing them through contiguous rows of holes in a bottom board fixed 2″ to 3″ below the hooks; it contains two rows of holes for one row of hooks in the Jacquard. Each neck cord is knotted at two points, about 5″ apart, to provide eyes for the reception of short shafts; the latter are then out of the way; they work in the least crowded parts of the harness, and give satisfactory results.

Another double scale harness has been in common use in the cotton industry for many years. It is built to effect a saving of half the cards as compared with an ordinary harness. Two separate machines are often used—one takes all odd-numbered couplings, the other all even numbers; but a double lift single cylinder, or a double lift double cylinder machine answers the purpose admirably if the neck cords are disconnected, and tied to separate couplings in the usual manner; then if cards are presented to needles, with holes cut in all possible places, plain cloth will be woven, for all hooks on one griffe move alternate couplings, therefore the first card on a 400 machine will lift all odd threads from 1 to 799 in every repeat, and card 2 all even threads from 2 to 800. Any kind of figure in which only one set of threads is to float can be obtained; and all grounds in which no two adjoining threads are required to lift simultaneously are also possible.

It is obvious that a warp float must be made by weaving a fabric face down, and a weft float by weaving it face up.

Pressure Harness

A pressure harness requires Jacquard and healds combined, but both to be moved independently, and yet to act upon the same threads. A figuring harness may be

Digitized by Google

straight, centred, combined, or of any other type, but it must be placed farther from the fell of cloth than for common work. As a rule, a space is left between back shaft and comber board of 7″ for cotton, and 10″ for linen warps; from two to five threads are drawn through each mail, but where more than two are needed, decked mails must be used to prevent the threads from twisting.

Heald shafts, corresponding in number with the threads in one repeat of the ground pattern, are suspended as near the fell of cloth as possible, and are either furnished with large eyes from 2¼″ to 3″ deep, or double the number of clasped healds are used; in the latter event, every thread is drawn above one clasp and under another. Warp which has passed in groups through the mails is divided, and drawn singly in straight order through the healds.

When all eyed shafts are level the Jacquard must be capable of lifting warp without obstruction from the healds, after which one shaft must sink and one rise for every pick in order to weave a satin or twill. A sinking shaft pulls down one thread from each repeat of satin lifted by the Jacquard, and a rising shaft lifts one thread of each repeat left down by it. If the rising and falling of these shafts is suitably arranged weft satin will be formed throughout for ground, and warp satin for figure.

The saving effected by this harness is very great; for example, a 600 machine with 4 threads to a mail and 4 picks to a card gives a pattern that repeats on $600 \times 4 = 2400$ threads. This number moved by a single harness would require four 600 machines, and therefore 4 cards to a pick, in place of 1 card to 4 picks, or altogether $4 \times 4 = 16$ times as many cards as a pressure harness.

The smallest possible sheds and shuttles are employed;

Digitized by Google

nevertheless, it puts great strain upon warp; but, on the other hand, it is firmer and better adapted for very fine fabrics than the Bessbrook, or any other twilling machine that has been introduced to replace it. All figures produced

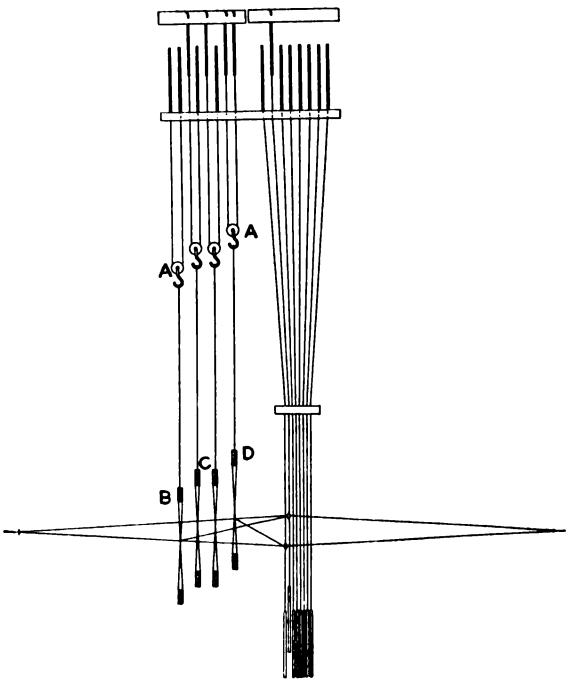

FIG. 113.

by it have a somewhat jagged appearance, and lack fineness of outline and detail.

Healds are moved by the Jacquard, by tappets, and by dobbies. When the former is employed, each shaft is suspended by tying one neck cord to two hooks and passing it under a grooved pulley *a* (Fig. 113), from which cords

Digitized by Google

go down to an upper shaft. A shaft can be placed in three positions: *b*, when both hooks are down; *c*, when one hook is lifted; *d*, when both are lifted; the first holds warp down that would otherwise be lifted by the harness; the second puts a shaft into its out-of-action position; and the third lifts warp that the harness would leave down. But this system only lends itself to the production of unequal fabrics, in which warp exceeds weft in the proportions of 2, 3, 4, or 5 to 1. If healds are moved in a similar manner by tappets or dobbies, the Jacquard can remain lifted for any number of picks, and shafts may move pick by pick to weave the satin.

Gauze Weaving

Designing and fabric structure are outside the limits of the present treatise; nevertheless, it may not be amiss to briefly describe the nature of the work to be done in order to produce fabrics in which any portion of the warp threads is made to twist partly, or wholly, round other threads. Nearly all classes of shedding motions are available for this purpose, but some answer better than others. In every case special appliances are required to give the twist, such as healds, a reed, or needle frames. The former are in most extensive use for all round work, but the two last named possess advantages for weaving those fabrics where the order of lifting and twisting is limited. Every twisting thread must be moved at two points. If healds are employed throughout, ordinary ones are used to lift a straight or open shed, whilst a heald and half heald combined cause one thread to twist half round another and form a cross shed.

The accompanying Figs. (114, 115, and 116) show how this effect is produced. Fig. 114 is a draft and tie-up for a

Digitized by Google

simple gauze; the thick, short lines at the top indicate that two threads pass through one dent of the reed. Horizontal lines 1, 2 are two heald shafts; the former containing all even threads, the latter all odd threads of warp; *s*, *d* are respectively standard and doup; both are better seen in Figs. 115 and 116. Standard *s* is an ordinary heald shaft into which the half heald *d* has been looped by passing the twine over and through the eyes of *s*. When warp has been drawn into shafts 1, 2, alternately, every odd thread

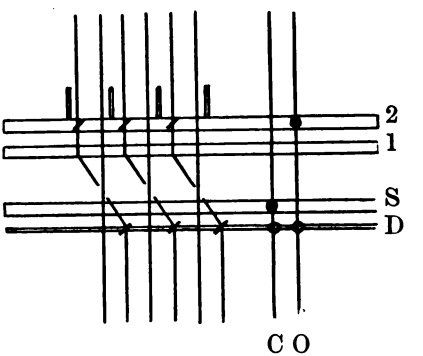

FIG. 114.

is crossed under the next even one, and passed through a loop of the half heald.

Dots on vertical lines *o*, *c* (Fig. 114) represent the order of lifting the shafts; *o* is an open shed obtained by lifting *d*, 2, as clearly seen in elevation (Fig. 115); *c* is a cross shed made by raising *d*, *s*, also shown in Fig. 116.

Twisting one thread round another and lifting the same threads for every pick are distinguishing features of gauze; the twist binds all threads on shaft 1 firmly into the fabric, although they are never lifted above weft. It is quite evident that threads lifted for a cross shed will be strained

Digitized by Google

more than when lifted for an open one, unless something is added to reduce the tension. This is usually provided for

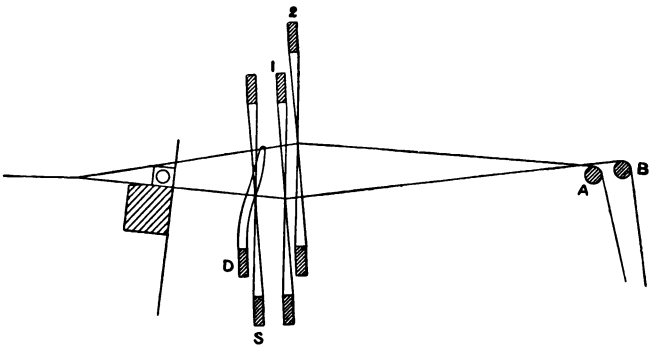

FIG. 115.

by passing crossing threads over a bar *a* (Fig. 115), that moves in to slacken twisting warp, and stationary threads over a fixed bar *b*.

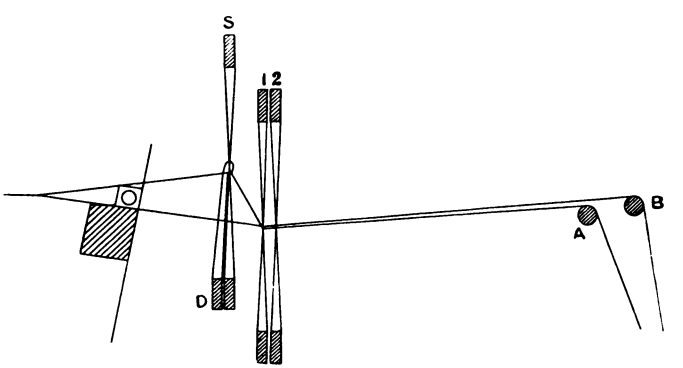

FIG. 116.

When two ends cross two, or more, a method is sometimes adopted which dispenses with a standard and renders

Digitized by Google

unnecessary the use of a back shaft for crossing threads. Two half healds *c*, *d* (Fig. 117) are employed with their laths at the top; a loop from each is connected by a glass bead *e*, and threads 1, 4 pass underneath 2, 3, and through bead *e*. Threads 2, 3 are drawn singly through an eye on *a* or *b*, then all four are put into one dent of the reed. By lifting *c*, *d* in rotation, *c* causes the bead *e* to pull threads 1, 4 to the left of 2, 3, and *d* acts to pull them to the right of 2, 3. Tie 5, 6 show the above, and 7, 8 show

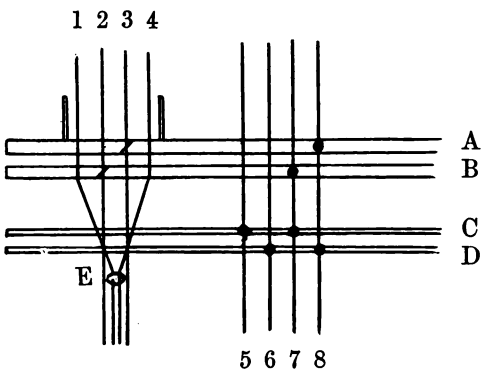

FIG. 117.

threads 2, 3 working in plain cloth order, with 1, 4 twisting round them as before.

Coarse open fabrics can be woven without healds by the application of two shafts *a*, *b* (Fig. 118), into which needles *c*, *d* are driven; the needles in each shaft must be close enough to present an eye opposite every dent in the reed. Shaft *a* is placed above the warp with eyes *c* at the bottom; *b* is placed below, with eyes *d* uppermost, and a thread of warp is drawn through each. When fixed in the loom so that all warp forms one line, the eyes of shaft *a*

Digitized by Google

are midway between those of shaft *b*; hence, by forcing *a* down and *b* up warp will form two lines to receive the shuttle; they then move back again until eyes *c*, *d* have separated warp about $\frac{3}{8}''$ in the opposite direction. At this point lateral movement is given to both; *a* slides in one direction, *b* in the other, but only just far enough to cross

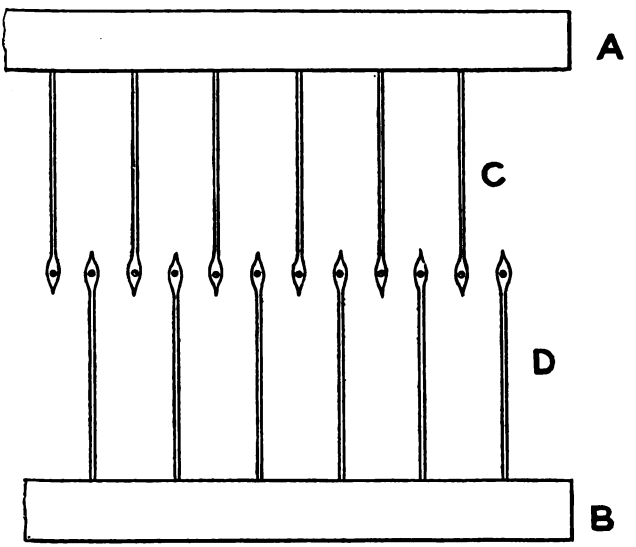

FIG. 118.

threads. The next vertical movement again forms a shed, therefore, if the first was an open one, the second will be crossed. Lateral motion in both staves is derived from cams upon the main driving shaft. One, situated near the end, is in the form of a disc, and the other is a cross-grooved cam secured near the centre.

A better plan is to employ a gauze reed that is made to rise and fall by the action of a cam. It has a half dent

Digitized by Google

placed between all ordinary ones; the half dent is provided with an eye near the top for a crossing thread to pass through, but straight threads are drawn through eyes in an ordinary heald, or through mails in a Jacquard harness, and are then taken between full dents of the gauze reed, and

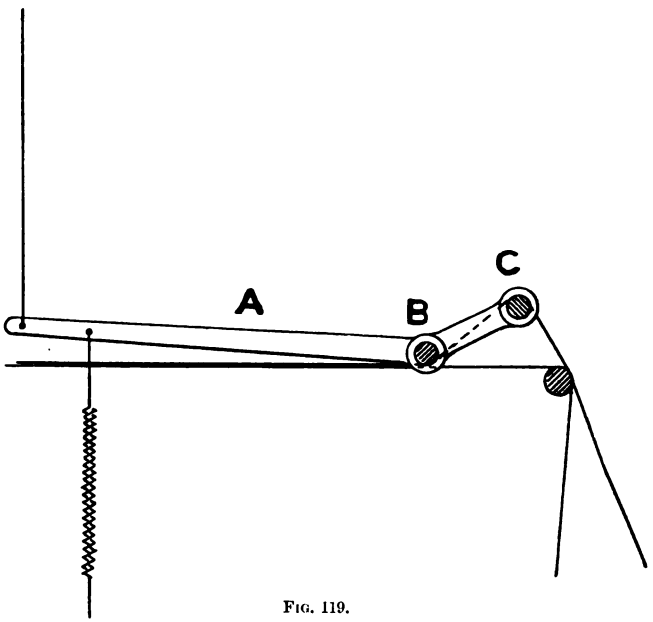

FIG. 119.

finally, straight and crossing threads go in pairs between the dents of an ordinary reed.

When all straight warp is above the half dents, the back harness is pushed or pulled sideways to carry its warp to the opposite side of the half dents, the reed then rises and takes up all crossing threads on the right or left of stationary threads.

Digitized by Google

Gauze Harnesses

Special harnesses are built to weave gauze fabrics with bottom and top doups; still gauze can be woven with an ordinary harness if doup and standard shafts are placed in front of it, and if crossing threads pass over an easing bar that moves to slacken them, whenever doup and standard rise together. Movement may be given to an easer by spare hooks from the Jacquard, or by a tappet fitted upon any

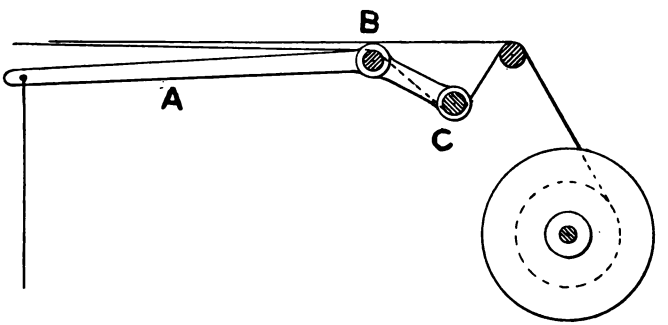

Fig. 120.

convenient part of the loom. An illustration of each method is given in Figs. 119 and 120. Fig. 119 shows a lever *a*, to which a cord is tied and carried to the Jacquard; *a* is fulcrumed at *b*, and at its extremity a rod *c* passes across the loom to support all crossing threads. An upward movement of the cord carries *c* down and slackens the threads. In Fig. 120 the cord goes down to a tappet treadle, and rod *c* is below the straight threads, hence easing is accomplished by pulling the cord to elevate *c*.

Every crossing thread for a bottom doup, with two ends in a dent, after passing through a figuring mail, is taken under its fellow, and also drawn through a separate loop

Digitized by Google

in the doup, then, for alternate picks, standard and doup go up together to lift half the warp, say all odd threads. At the same time some even threads are lifted by hooks to form figure, because wherever both odd and even threads are lifted in any dent, no douping can take place, for the simple reason that there is nothing to cross round ; but where even threads are down, odd ones are crossed. On intervening picks, lift the half heald, together with crossing threads by the figuring harness where gauze is wanted, and odd and even together to form figure, or even only for plain cloth.

A harness of this kind can be used to weave many gauze fabrics ; but it is limited in the sense that only one pick can be inserted into a shed in the gauze portion, if at any other part plain cloth is used.

Bottom Doup Harness

If two or more picks in a gauze shed are combined in any way with plain cloth a special gauze harness is required. These are built in various ways ; generally there are three distinct sections, and three separate comber boards.

If cards fall over one side of a loom from a 600 machine, and the reed has four threads through each dent, two crossing two, the hooks must be divided into six parts, and one-sixth used for easers, four-sixths for figuring, and one-sixth for douping, or, 8 rows and 4 hooks from the back for easers, 33 rows and 4 hooks for figure, and 8 rows and 4 hooks for doups $= 100 + 400 + 100 = 600$. In the event of cards falling over warp take the two front rows for easers, eight middle rows for figure, and two back rows for doups $= 50 \times 2 = 100$, and $50 \times 8 = 400 = 100 + 400 + 100 = 600$. In building an easing harness neck cords are attached

Digitized by Google

alternately to levers in two lines *a*, *b* (Fig. 121), one

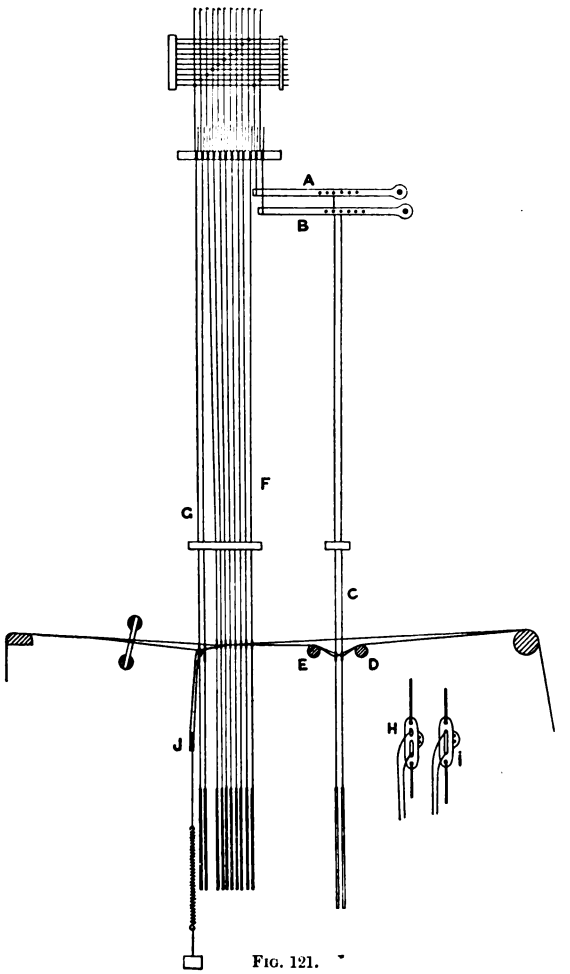

FIG. 121.

approximately $4\frac{1}{2}''$ above the other; and mounting

Digitized by Google

threads from the levers are connected to couplings *c*, the mails of which are in a lower plane than those of the figuring harness, by from 1″ to 2½″, but on an average 1½″.

Instead of the arrangement described above, Devoge & Co. employ two griffes for a single lift machine; but the second, which is capable of adjustment, has a shorter traverse than the first, and merely controls easing threads. These makers also move doup and easing hooks by one set of needles, for the purpose of ensuring certainty in lifting both together and slightly reducing the cost of cards. Metal mails are often used, still glass ones are preferable, as they do not cut, and are smoother; they contain all crossing threads, and lingoes must be heavy enough to pull them down, viz. from 4 to 10 per lb. Any one, or any group of the 100 in each repeat, can be lifted separately to slacken the threads each controls. Two stout rods *d*, *e*, called the bridge, touch the under side of all straight threads, and are bolted on slotted brackets that permit of lateral adjustment. As a rule, they are from 3″ to 4″ apart.

The figuring harness *f* is about 12″ in advance of the former and is built on the ordinary plan, but fine enough to receive every thread of warp separately. Between doup harness *g* and figuring harness *f* a space of from ½″ to 1½″ is left to minimise the strain when threads cross. The mail eyes of this section are about ¼″ lower than those of *f*, and sometimes contain two eyes for doup twine to be drawn through, as shown at *h*. At other times a single eye *i* is used and doup twine is pushed through it; this, however, is troublesome to the weaver when warp breaks, as doups are apt to fall down out of the mails. On the other hand, if new doups are required that pass through two mail eyes, it is necessary to build them at the loom. Doup slips are all

Digitized by Google

made fast to a heald shaft *j*, which is raised and lowered for every pick by making it fast to the machine griffe and pulling it down by springs; it requires careful adjustment, or the doups rapidly wear out. Wearing is to a large extent prevented by fastening regulating cords upon opposite ends of the doup shaft, and also to the comber board, and so prevent the springs from pulling leashes tight upon doup mails. Doup mails vary from 16 to 24 to the lb.

After crossing warp is drawn double through easing mails *c*, and all threads singly through figuring harness *f*, they are separated, and the first pair of crossing threads are passed to the right or left, but under the first pair of straight threads, then drawn through number 1 doup loop, and finally, straight and crossed, go through the reed 4 in a dent. It will be noticed that crossing threads are drawn into easing, figuring, and doup mountings (Fig. 122), whilst straight threads only go through one eye in the figuring portion.

To weave figure lift half heald *j* and figuring threads *f* in the middle harness, as at 9. To weave gauze lift those easing mails *c* that slacken the threads required to cross, corresponding doup mails *g*, and half heald *j* for cross sheds, as at 10. For open sheds lift half heald *j*, and crossing threads in middle harness *f*, as at 11.

With such a harness it is next to impossible to reach the limit to which variations can be carried; the crossings may be of a most irregular description, including one crossing one, and six crossing six. Picks in one gauze shed can be altered at pleasure. Any single doup, or any assortment of doups, can be brought into use at any time. Warp and weft floats in the figure pattern can be combined with all kinds of ground working, provided plain cloth surrounds

Digitized by Google

the gauze, for it is essential that warp shall be thoroughly opened out before figuring is attempted.

It has been elsewhere mentioned that double-acting shedding motions—namely, those that give a semi-open shed—are not so well adapted for gauze weaving as closed

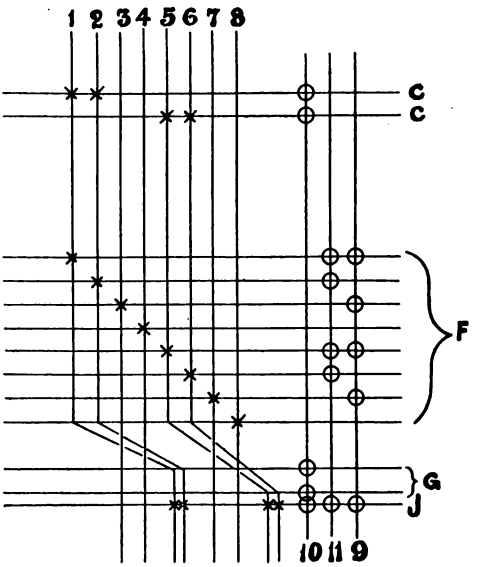

FIG. 122.

shedding motions. Still any type of double lift machine can be used if suitable mechanism is applied for lifting standing threads half-way, to enable crossing threads to twist round them.

It would appear that, as one shaft begins to rise immediately another begins to fall, slack warp given off by a sinking shaft would be taken up by a rising one; but it must be remembered that both shafts are level midway

Digitized by Google

between the top and bottom lines, and the easer, which was in its most advanced position when the downward movement began, has moved back at least half-way, and taken up a considerable length of the crossing threads, therefore such threads, at this point, must either pull up standing ones or cause breakages.

It is the function of shakers to prevent strain and breakage by lifting standing threads half-way, and dropping them again during the formation of each gauze shed.

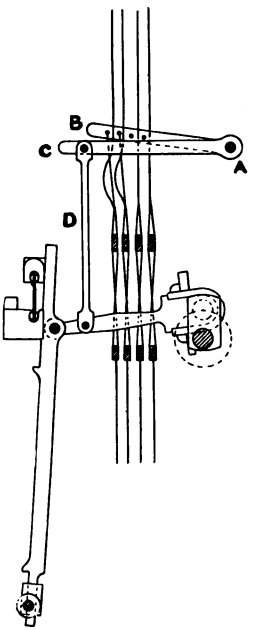

Fig. 123.

For heald work a shaft *a* (Fig. 123) is held parallel with the heald shafts by brackets, and carries three arms, two of which *b* are connected by cords to those shafts only that contain standing threads; the third arm *c* has a rod attachment *d* to one of the connecting arms of the driving crank. As the latter rotates, a vibrating motion is conveyed by rod *d* to shaft *a* and through arms *b* to the standing shafts, which is sufficient to slacken the warp and permit of crossing.

It is equally easy to apply parts to a Jacquard harness that will give similar results. Probably the best shaker consists of Bannister shafts threaded through the couplings which contain the standing warp, and elevating them every pick by means of a tappet.

Digitized by Google

Top Doups

Top doups are extensively used in the cotton industry for shaft work as well as with Jacquards.

A top doup harness is similar to one for bottom doups, except that the half heald shaft is uppermost, that doup

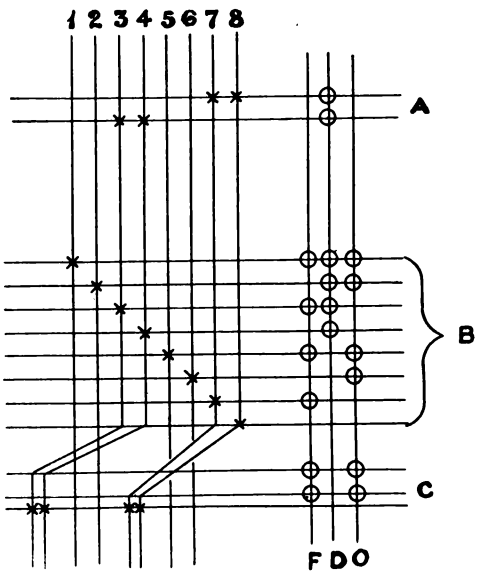

Fig. 124.

lingoes are somewhat heavier, and that crossing threads are above, instead of below, straight ones. The half heald shaft is sometimes screwed to the doup comber board; at other times it is suspended from the machine. In the former case lines 1 to 8, in Fig. 124, are intended to represent threads passing through mails, the couplings of which are in the first row of holes in comber board *b*;

Digitized by Google

3, 4, 7, 8 are crossing threads, but they also pass through mails in easing mounting *a*, and through two loops of half heald that form part of doup mounting *c*.

An open shed *o* is formed by lifting doup mails with straight threads in harness *b* wherever gauze is required. For a cross shed *d* lift easers with straight and crossing threads where necessary; and for figure *f* lift doup mails with figuring threads in harness *b*.

The chief differences between the two systems of working consist in lifting crossing threads for every pick of gauze with a bottom doup, and straight threads every pick with a top doup; also with the former, doup and easer invariably move together; in the latter, this never takes place, for lifting a doup mail allows crossing threads to assume the parallel position, whilst the weight of doup mails is sufficient to hold them in the cross, but lifting an easer takes off the strain and permits straight threads to rise at the opposite side.

A top doup has many advantages over a bottom doup, chief of which is that doups are in the most convenient position to repair in case of breakage or disarrangement; as it is impossible, even with single-eyed doup mails, for doup slips to fall out of reach of the weaver.

Top doups may, of course, be used when twisting threads go under straight ones, if the former are lifted every pick; but in such cases doup twine and stationary warp rub in the formation of an open shed, the doups also have a tendency to lift straight threads above the bottom shed line and form irregular openings.

Doup Harness in Two Sections

Another form of doup harness is still occasionally met with; it only requires two sections in the Jacquard—one for

Digitized by Google

doups and easers, the other for figure. Every doup slip *a*

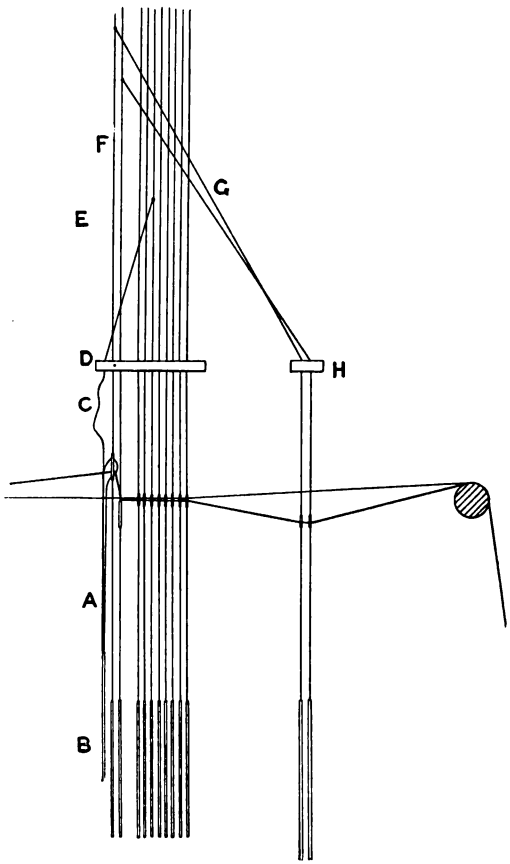

FIG. 125.

(Fig. 125) is tied to a separate lingoe *b*, and a second thread *c* from the lingoe goes up through comber board *d*, and is

Digitized by Google

tied upon figuring thread *e*, that controls the same warp as the doup slip.

By this means a slip is only lifted when its warp is lifted in the figuring harness. Doup mounting *f* is of the usual type, but shortly below the neck cords a mounting thread

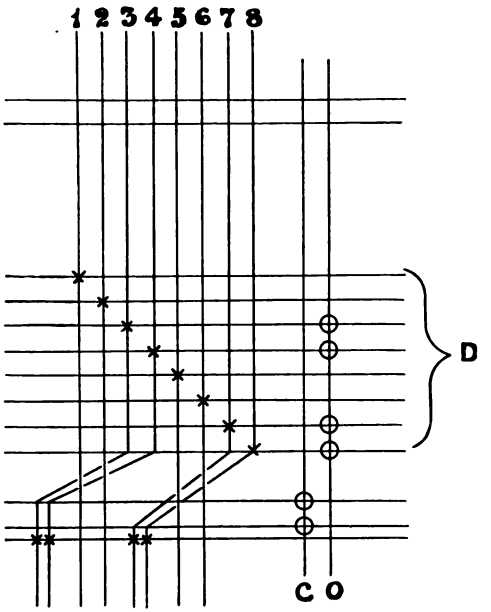

FIG. 126.

g is led off to the easing comber board *h*. Although this plan augments the figuring capacity of an ordinary Jacquard, it gives the harness an exceedingly crossed appearance, and increases friction. Fig. 126 shows two threads crossing two; threads 1 to 8 fill part of a row of comber board *d*; 3, 4, 7, 8 are crossing threads that pass through two easers and two doups; *o* shows the lifting for an open shed, and *c* that for a cross shed.

Digitized by Google

Wilkinson's Harness

Wilkinson patented a harness that performs the work

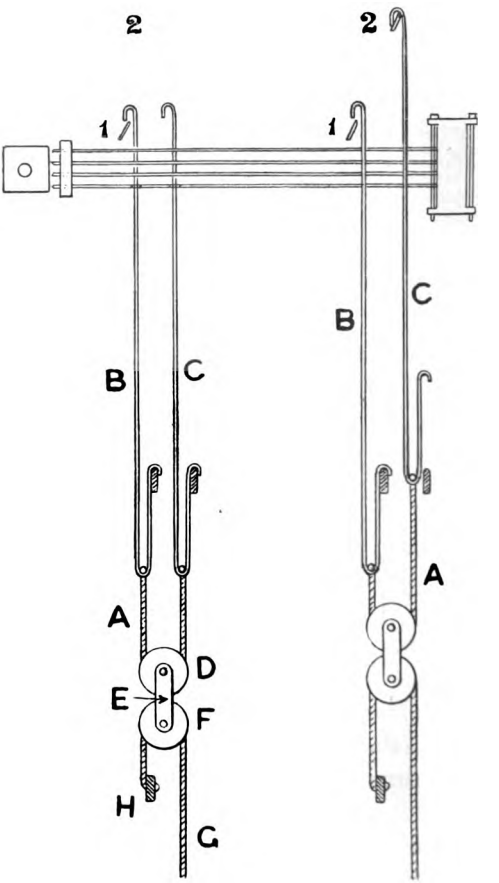

Fig. 127.

of an open shed Jacquard without requiring additional

Digitized by Google

lift in the griffe. It is attached to a double-acting single cylinder machine, in which one neck cord *a* (Fig. 127) is connected to two hooks *b*, *c*, and passes under a grooved pulley *d*, mounted in a pair of plates, one of which is shown at *e*. The plates also support a second grooved pulley *f*, round which a supplementary neck cord *g* is passed and secured to one of a series of fixed bars *h*, running lengthwise of the machine and between alternate lines of hooks; the other end of *g* is made fast to the mounting threads.

If both hooks are down, warp governed by them is on the bottom shed, but by lifting one it is raised to the top line, and may be retained at that point for any length of time, by causing the reciprocating griffe bars to carry up one hook at each upward journey, for cord given off by the fall of *b* is taken up by the rise of *c* without putting additional strain upon any working part of the machine.

PART VIII

CARD-CUTTING

Designs are painted on paper ruled vertically and horizontally so that every space between two vertical lines shall represent a warp thread, and every space between two horizontal lines a pick of weft. Paint put upon the small squares, formed by vertical lines intersecting horizontal ones, denotes, as a rule, warp lifted above weft, and therefore holes in cards. At certain regular intervals thicker up and cross lines, called bars, are ruled; the up lines enclose as many threads as there are needles in one short row of the Jacquard to be used. Cross lines mainly serve as guides to the designer and card-cutter.

Digitized by Google

Each card is cut from one horizontal reading of the design extending from side to side, but holes punched in cards have the effect of turning up the design, bar by bar, into short vertical lines.

Card-cutting machines are of two classes—namely, those used to transfer a pattern from design paper to cards, and those used to copy perforations from a set of existing cards to a new set. In many cases they are distinct, but occasionally they are combined.

The most familiar machines of both classes appear to be of French origin. The oldest of all is still used in districts where small Jacquards are the rule. It consists of a pair of perforated plates that are hinged together, and after placing a blank card upon the lower plate, the top one closes over it, and is locked by a sliding catch. Both plates are secured to a frame, with rollers underneath, that runs on railway lines. A third, or carrying plate, is perforated like the others, but furnished with a handle at each end; it is placed on a bench, above which the design to be copied is fixed, and a box containing round punches $1\frac{1}{2}''$ long by $\frac{7}{32}''$ in diameter, and $\frac{1}{4}''$ heads, is within easy reach. The punches are dropped one by one into holes of the carrying plate to correspond with the painted design, then plate and punches (for the heads prevent the latter from falling out) are fitted above the other plates, and pressure of some kind is exerted to force all punches through the card. The apparatus now generally used for this purpose is a roller press, turned by one hand, and the plates are pushed beneath it with the other.

The process is much more expeditious than might be supposed, especially where the groundwork of a pattern is regular, such as plain cloth or twill. In the case of a plain ground the punches are set for the first card, but after that

Digitized by Google

a cutter cuts odd picks only for the first reading, because few punches require changing, probably not more than a dozen. On the second reading he takes all even picks. A twill ground is read by repeats of the twill; thus for a four-end twill every fourth pick is cut for each reading.

The above machine is converted into a very useful repeater by the addition of a frame that supports a carriage on sliding bearings. The carriage *a* (Fig. 128) generally contains 612 horizontal needles *b*, arranged in 12 rows of 51 each. Every needle is supported at the front by two perforated plates *c*, *d*, the former is forced away from the latter by spiral springs threaded on four spindles, all riveted to *c*, but passing freely through *d*. A similar perforated plate *f*, fixed in the rear of carriage *a*, supports the back ends

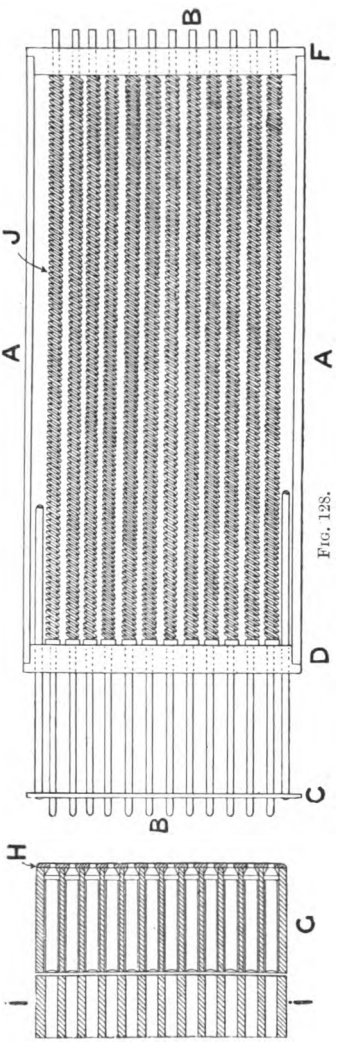

FIG. 128.

Digitized by Google

of *b*. Each needle has a shoulder fitted at a certain distance from its point by coiling a piece of wire once round, then a thin brass spiral *j* presses against the collar at one end and against plate *f* at the other, to constantly hold the points of *b* beyond plate *c*. A punch box *g* is drilled to receive all the punches, which are pushed in head first, and prevented from passing out at the back by a thin brass plate *h*, also drilled, but with holes only large enough to permit needles *b* to enter. A stud protrudes from *g* near each end, to hold carrying plate *i*, with its holes opposite those of *g*. Then the card to be repeated is fastened by its peg-holes upon cylinder pegs in plate *h*, carriage *a* is drawn forward by pressing down a treadle, and springs *j* are strong enough to cause needles *b* to push punches from box *g* into plate *i* where holes are cut in the model card, but the card causes *j* to contract and needles to slide back that are opposite blanks. Carrying plate *i* is removed to book plates containing the card to be cut, and all are moved under a press either turned by manual power or by an engine. After cutting the card and replacing carrying plate *i* upon the studs of *g*, a comb, consisting of 612 pieces of wire driven into a wooden back, drives all punches into punch box *g*, and a second card is fixed upon the pegs of *h* to continue the operation. This machine is good, reliable, and simple, but compared with automatic repeaters, the process is slow and costly.

Reading-in Machine

The first card-cutting machine was patented in England in 1821 by Wilson from a foreign communication. It is still used in many parts of the country, but is being gradually pushed out by modern improvements.

Digitized by Google

As ordinarily arranged, it has 612 endless cords *a* (Fig. 129), which go round guide rollers *b*, and are kept in tension

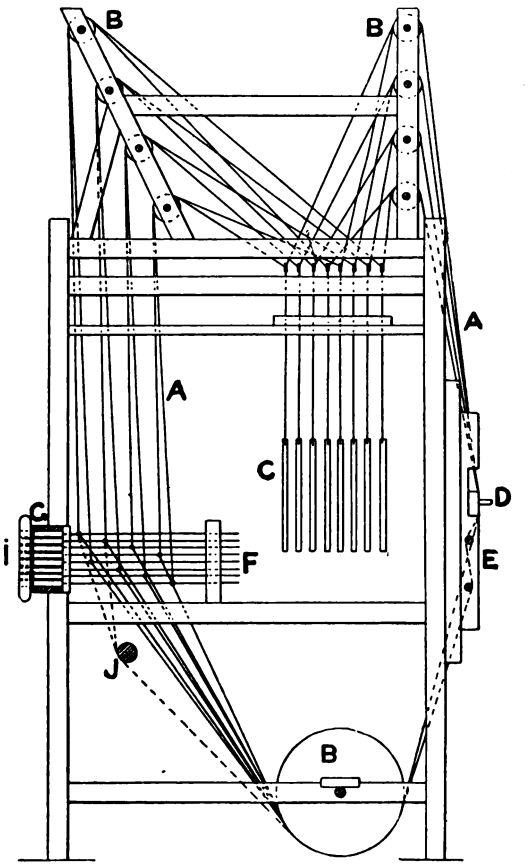

FIG. 129.

by passing each through a bead and hanging a heavy lingoe *c* upon it. At the back of the machine cords *a* are led

Digitized by Google

down in a straight line, separated by a comb *d* into sets of threads corresponding with the number of vertical spaces enclosed by thick lines on the design paper, and further divided by rods *e*, to form an end and end lease. At the front each cord *a* goes through the eye of an ordinary Jacquard needle *f*, the latter are arranged in rows of 12, and are supported by needle board and heel rack. Immediately in front of the needles a punch box *g*, and carrying plate *i*, as previously described, are placed. It therefore follows that by drawing any cord *a* forward, its needle will push a punch out of box *g* into carrying plate *i*, and by means of the latter it is taken to a railway press and forced through a card.

The operation is as follows :—The design is placed before the reader, a straight-edge assists him to read across a horizontal line, and he proceeds to transfer the pattern to cords *a* by weaving short cross twine or picks amongst them, in such a manner that every vertical thread representing lifted and sunk warp must respectively pass in front of and behind a cross twine. As reading continues cords *a* are gradually pulled onward, until those picks first read-in are carried to the front, where another man inserts a roller *j* in place of a pick, fixes it in a sliding frame, presses down a treadle, and draws forward all cords in front of *j*, and by so doing, pushes corresponding punches into the carrying plate.

Reading-in and Repeating Machine

In the course of a few years the foregoing machine was converted into one for reading-in and copying, from which we obtain our best automatic repeaters. Instead of using endless cords, a series of vertical cords *a* (Fig. 130) were each formed with a loop at the bottom, and after pushing a rod

Digitized by Google

through all, the latter was forced into a slot in roller *b*. Near the top of *a* a second series of loops *c* were made, and each strand threaded through a separate hole in guide board

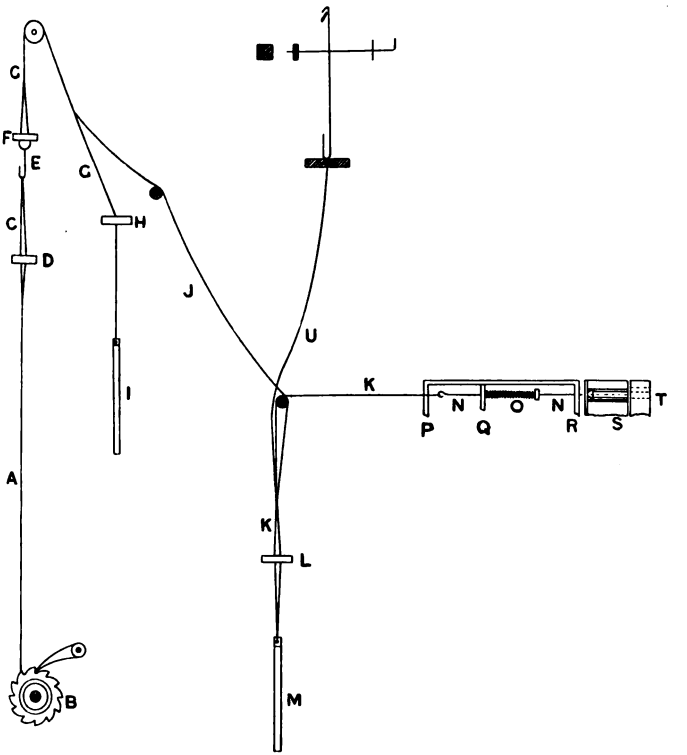

FIG. 130.

d, then finally dropped into a wire hook *e*, which in its turn was retained in a fixed frame *f* by threading its connecting cord *g* through two holes in *f*. Cord *g*, after passing over a guide pulley, and through comber board *h*, terminated

Digitized by Google

with a lingoe *i*. A cord *j* was led over two guide rollers to the vertical part of cord *k*, and there tied. The coupling twine of lingoe *m* formed part of *k*, and was drawn separately through holes in board *l*, then taken up to and over a glass rod, bent at right angles, and made fast to needle *n*. Three perforated plates *p*, *q*, *r* served respectively as front and back guides for needles *n* and cord *k*. A collar twisted round *n* acted as a stop-hoop for spiral *o*, and its rear end abutted against plate *q*. Punch box *s* and carrying plate *t* were fixed immediately in front of needles *n*, as already described in the reading-in machine. The weight of *m* contracted *o*, and pulled needle *n* back until such time as the design, read into cords *a*, had to be transferred to cards, when, by inserting a roller in the position of the top cross cord, and pulling it forward, cords *g*, *j*, *k* would be elevated, the weight of *m* removed from *n*, springs *o* would expand, and drive some of the punches into carrying plate *t*, after which it was ready for the press. This completes the reading-in section of the machine.

The repeating section will be readily understood. Over the centre of comber board *l* an ordinary 600 Jacquard was placed, and a thread *u* from each hook was connected to its proper cord *k*. By hanging the cards to be copied in a card cradle and leading them round the cylinder, the machine, when set in motion, would lift cords *k* corresponding with holes in the card, and in each case a spring *o* would force its punch into the carrying plate *t*.

Vertical Punch Reading-in and Repeating Machine

An alteration was afterwards made in the form and position of the punches, by means of which an excellent machine was obtained. All parts of the reading-in section

Digitized by Google

remain precisely as in the former machine; they are lettered in Fig. 131 from *a* to *j*. The Jacquard and connections *u* also remain unchanged; but cord *k*, after passing the glass

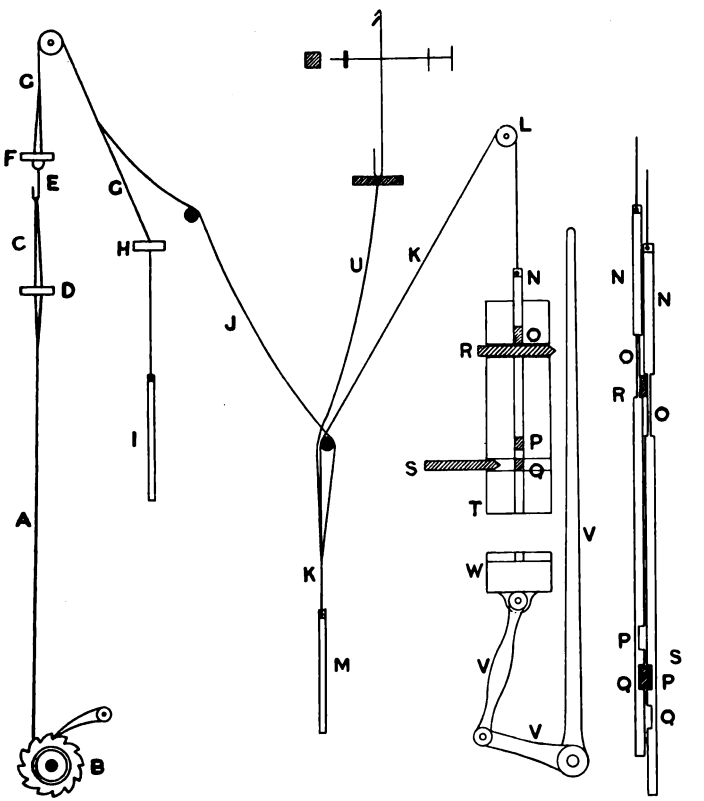

FIG. 131.

rod, is taken over a guide pulley *l*, thence down to the top of a vertical punch *n*, approximately 11″ in length by $\frac{7}{32}$″ in diameter. Each punch is filed away on one side down to

Digitized by Google

its diameter line to form slots *p*, *q*, both $\frac{3}{4}''$ deep, and a piece between them of $\frac{1}{4}''$ is left round. At *o* a space of $1\frac{1}{2}''$ is filed away at both sides, leaving a thickness of $\frac{3}{32}''$ only, to receive a fixed comb *r*, with 53 teeth, all $\frac{1}{2}''$ deep, and thick enough to touch two punches without preventing them from moving freely; this comb stops punches *n* from twisting. Slots *p*, *q* in two adjoining rows face each other, so that a movable comb *s* may be pushed through slot *q*, and each tooth will lock two rows of 12 punches; *s* has 26 teeth, $\frac{3}{4}''$ deep, and sufficiently wide to rest upon both lines of punches, and still allow it to slide in and out amongst them.

After withdrawing *s*, any of the cords, *j* or *u*, may lift some of the lingoes *m*, when punches, normally supported by the weight of *m*, will fall, until slot *p* faces the teeth of *s*, then as the latter moves forward some punches will be locked, with their ends protruding through plate *t*. A blank card is placed in position upon perforated plate *w*, the compound lever *v* is operated, and *w* is carried up to touch *t*. On reaching the latter point every punch that has a tooth of comb *s* through slot *p* will puncture the card, whilst those locked at slot *q* are out of its reach.

This machine is extensively used on the Continent, and it will be noticed that few alterations are required to bring it into the form in which Devoge & Co. supply it.

Devoge & Co.'s Automatic Repeater

This machine is a repeater only, therefore all the reading-in parts of the former are cut away and the Jacquard and its connections alone left. A 600 Jacquard is fixed on an iron framing above comber board *v* (Fig. 132), and cords *u* go down to lingoes *m*. Cord *k* is attached to *u*; it passes over a roller *l*, and is made fast to punch *n*; the

Digitized by Google

latter only differs from the French punch in having the metal filed away on both sides of slots *o*, *p*, *q* (Fig. 131), instead of leaving the punches half round at *p*, *q*. By adopting this form of punch the makers believe increased steadiness will be given, because comb *s* supports each on

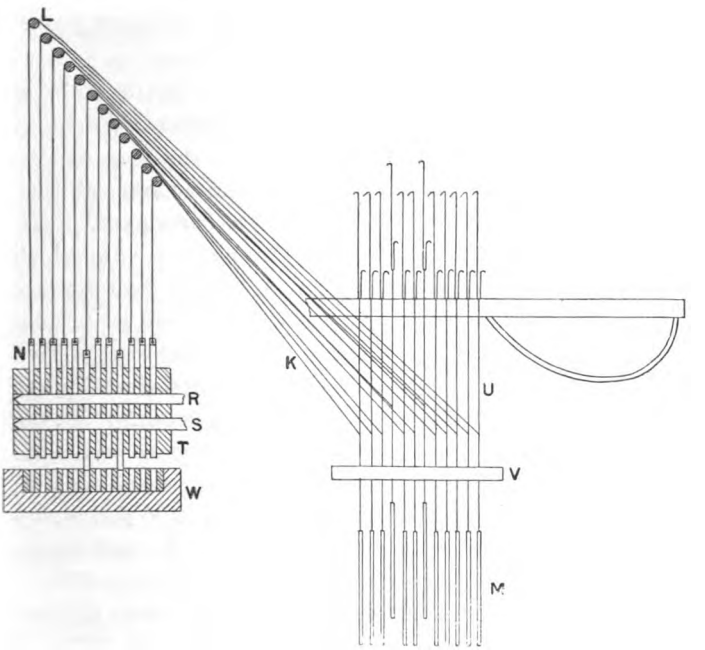

FIG. 132.

both sides. Cards have peg and lace holes punched by a separate machine, after which they are laced into a continuous chain, passed over guide cylinders and between plates *t*, *w*. The Jacquard rises, comb *s*, which has as many teeth as comb *r*, is withdrawn, punches *n* fall where their lingoes *m* have been lifted; comb *s*, in moving forward, passes through

Digitized by Google

slots q of lifted punches, and slots p of sunk punches, to lock them before cutting plate w rises with the card to be cut. Plate w is moved up and down by eccentrics, and the Jacquard by a positive cam; these render the machine thoroughly automatic.

M'Murdo's Repeater

M'Murdo's machine is the most recent modification of the French type. The maker has succeeded in doing for a repeater what the Jacquard does as a shedding motion —namely, giving all the parts a direct action, and thus obtaining a more compact machine from fewer parts.

A 600 Jacquard is fixed over the punch box, in which cranked needles $10\frac{1}{2}''$ long govern 18″ hooks; the latter are turned to face the spring box, and griffe bars are set to miss all vertical hooks and take up all inclined ones. Two pieces of wire u, u' (Fig. 133), when combined are 21″ long; they connect hooks and punches, u' is flattened at the bottom, punched, and bent at right angles, wire u is similarly treated, then a steel spring 2 is pushed over it; u' is threaded through the punched hole of u, and u goes through that of u', with spring 2 between the two bends, thus forming a sliding joint.

Punches n are 11″ long, and notched as usual at three places, but only on one side; the top notch o is $1\frac{3}{4}''$ long, the two lower ones are each $\frac{3}{4}''$, whilst the round portion between them is $\frac{1}{4}''$ long. All slots in two adjoining rows face each other. Combs r, s both have the same number of teeth—namely, 26, the former serves as a stay, also to prevent twisting, but s is the movable comb.

Blanks in the cards to be copied, in pushing back needles, press hooks over the griffe bars, comb s is with-

Digitized by Google

drawn, punches corresponding with hooks on the griffe are lifted out of reach of the blank card on cutting plate *w*, after which comb *s* moves in to lock them either up or down, and the punch box is brought down bodily, by means of eccentrics, upon the stationary plate *w*. Sliding joints 2 permit of the downward movement.

This machine is also perfectly automatic and reliable.

Nuttall's Repeater

About twenty years ago Nuttall introduced what many believed to be a good automatic repeater, but it has not proved a striking success, although its construction is both original and ingenious.

The upper part of this machine contains needles *a* (Fig. 134) resembling those in a Jacquard, the cards to be copied are passed over a cylinder *d*, and moved successively into contact with them; a hole in a card leaves a needle *a* unmoved, but a blank pushes it back. A set of vertical wires *b*, of which 51

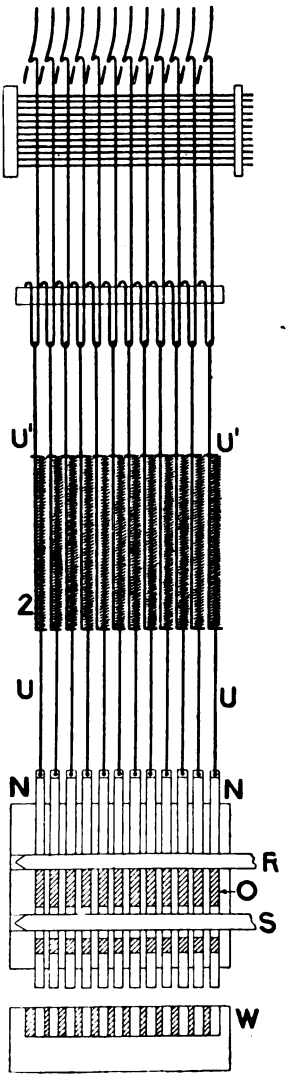

Fig. 133

Digitized by Google

move on each fulcrum pin *e*, are coiled at their centres to connect and control another set of needles *c*, by giving them an opposite movement to that imparted to the first set. Each needle *c* is furnished with a cylindrical plug; that in its normal position covers the head of a punch *f*, and prevents it rising. Every punch so covered will be forced through the card to be cut at the next upward movement of cutting plate *h*, but a blank in a

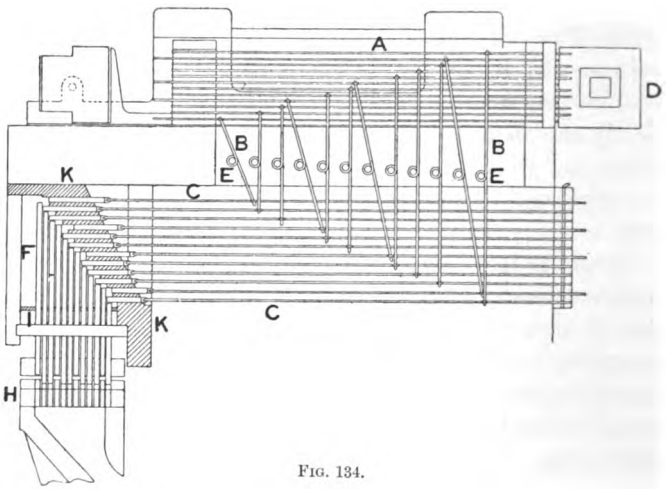

FIG. 134.

model card withdraws the plug and allows punch *f* to rise; its weight alone resting on the card not being sufficient to make a perforation.

There are 12 horizontal rows of plugs, each row containing 51; they are placed in tiers along a stepped, perforated plate *k*, so that the bottom or short row of needles *c* governing them are connected to the top row of *a*, whilst the top row of *c*, viz. the longest, are coupled with the bottom row of *a*. Beneath the plugs are 12 rows of

Digitized by Google

punches, with heads varying in length to suit the position of the plugs which act on them. All are provided with a collar *i*, formed at one uniform distance from the cutting point, and they are supported upon plate *j* as *h* moves down to bring the next blank card into position.

The machine failed partly through the liability of its parts to vibrate, partly through the superabundance of wire employed in its construction. The thickness of a plug made all the difference between forcing a punch clean through a card and leaving the latter blank; in some cases vibration prevented a card from being perforated; in others, the setting was so close that cards were partially cut where they should be blank.

The so-called Royle repeater is in all essentials the same as Nuttall's machine.

At least three attempts are at present being made to produce a machine that will read cards from the design automatically, but up to the time of writing, none of them can be said to have passed the experimental stage, notwithstanding the fact that one Company has been in existence for the last eight or ten years for the purpose of supplying the trade with designs made for, and cards cut by, one of the above-named machines.

Piano Card-cutting Machine

The writer has not been able to trace the development of the piano card-cutting machine now in general use for cutting from the design. It has been employed upwards of forty years, and during that time it has undergone various modifications.

It consists of an iron table, from the forward end of

Digitized by Google

which two uprights rise to support a pattern board 52″ long by 20″ deep; the design is pinned upon it, and two straight-edges traverse it from side to side; they serve as a guide for the eye in reading along the horizontal lines of the design. Both are moved up and down by a screw working in a nut on each end.

The chief feature of a piano is its head-stock *a* (Figs.

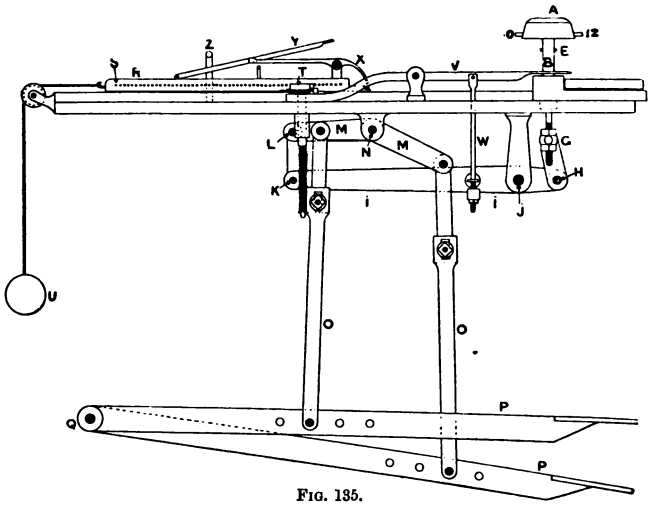

FIG. 135.

135 to 137); the lower part, consisting of two plates, is firmly bolted upon the table, with a space between them in the middle wide enough and deep enough to receive a card; the lower one contains a perforated cutting plate, and the upper one a guide plate for punches *c*. Two holes are bored through them near opposite ends for spindles *b* to work in; the latter support the movable head-piece *a*, in which a row of 12 vertical punches *c*, $\frac{5}{8}$″ from top to shoulder, and $3\frac{1}{4}$″ from shoulder to bottom, are fitted all

Digitized by Google

equal in diameter, and gauge to the holes in a Jacquard cylinder.

Immediately in front, and exactly midway between them, the peg-hole punch *d* is placed; it equals *c* in length, but is $\frac{3}{8}''$ in diameter. The upper edge of guide plate *e* supports all punches *c*, *d*, by their shoulders; 13 keys, numbered from 1 to 13, have square shanks and large oblong heads; all go through one of two slotted plates *f*, a spiral is threaded upon each, and a steel pin is pushed

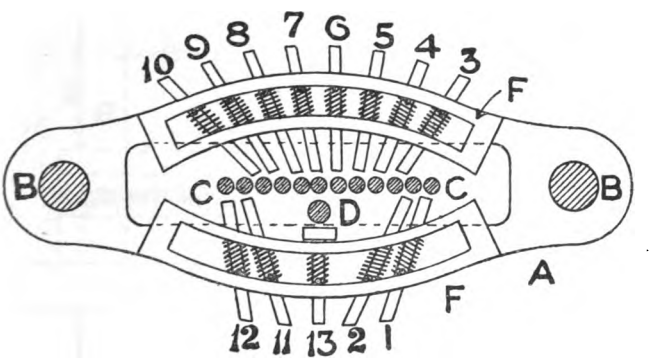

FIG. 136.

through the shanks to hold the springs away from the outer edges of *f*. Every key head covers a punch when pressed in, 1, 2, and 13 are controlled by the right thumb, 3 by the little finger of the right hand, 4 to 10 by the remaining fingers of both hands, 11 and 12 by the left thumb. When pressure is removed from any key its spring pushes it out to clear the punch.

The lower ends of spindles *b* are secured by lock nuts to cross head *g* (Fig. 135). A pin *h* goes through a forked pendant from *g* and lever *i*, the latter is fulcrumed at *j*, and is fastened by pins *k*, *l* to a three-armed lever *m*, that moves

Digitized by Google

round centre *n*; from the two remaining arms connecting rods *o* pass to treadles *p* which vibrate on pin *q*.

The above-named connections are made in such a manner that, as the card-cutter sits in front of the head-stock, with his feet upon the treadles, a downward move-

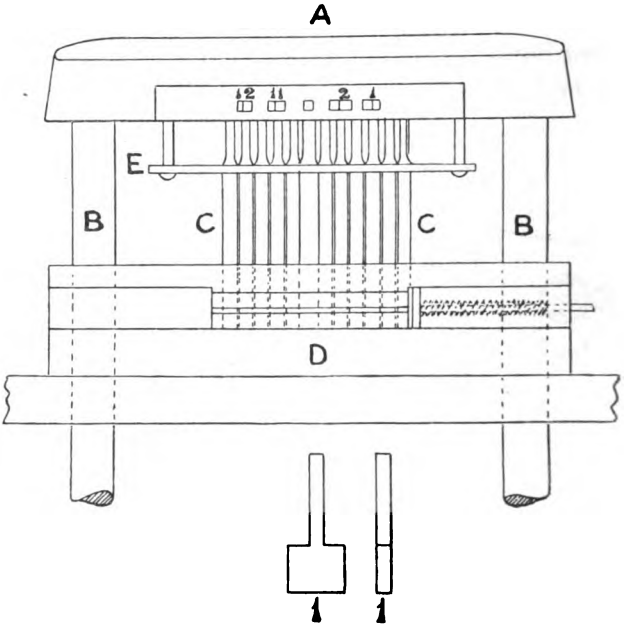

FIG. 137.

ment of his left foot will elevate head-stock *a*, and move, by means of plate *e*, all punches *c* out of the gap between the two fixed plates, then, if a card is pushed between them and some of the keys pressed in, a downward movement of the right foot will carry *a* down and force all punches that have their heads covered through the card; those uncovered

Digitized by Google

will rest by their own weight upon it, but will not perforate it.

Down the middle of the table two smooth rails are placed for the wheels of carriage *r* (Figs. 135 and 138) to run upon, *r* is moved by a rack *s*, a catch *t*, and a weight *u*. Rack *s* is composed of stout pins driven into holes drilled in a metal plate that is screwed along one side of carriage *r*; the gauge exactly equals the distance from hole to hole

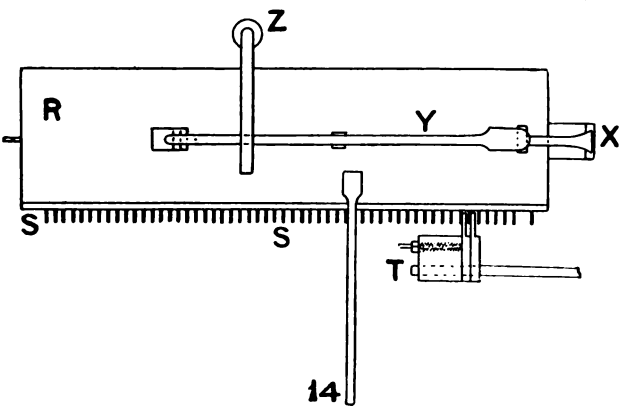

FIG. 138.

in a card. The shank of compound catch *t* passes through the table top and has a helical spring fixed on it by a pin to hold it down; two catches move in the rack of pins, one is fixed to the catch box, but the lower one is free to slide; it is kept in advance of the former by a spring, and the whole box is vertically moved when the left treadle is depressed by lever *v* upon which *t* rests, and a rod *w* attached to lever *i*. As *t* rises, the sliding catch comes into contact with the teeth of rack *s*, weight *u* pulls back its spring, and carriage *r* recedes one tooth from the head-stock.

Digitized by Google

In front of carriage *r* nipper jaws *x* are placed to receive a card which is pushed along a guide between the fixed plates of head-stock *a*, and below all punches *c* the nipper jaws are opened by depressing *y* with the left hand, the card is pushed close to a stop and level with the guide plates, the jaws of *x* close upon it and pull the card with the carriage as the latter slides tooth by tooth through catch *t*.

One bar from the design is read, and one short row of holes is cut at each downward movement of the right treadle, also one pin in rack *s* is passed as the lifting treadle is depressed. An index cord is tied upon arm 14, led over guide pulleys along the pattern board, and has a small weight tied to the opposite end. One row of a fully perforated card is numbered above the holes progressively and nailed upon the board; when carriage *r* is close to head-stock *a*, a knot is tied upon the cord, exactly opposite the first hole in the index card, and as the cutter is working, this knot should always cover a number corresponding with a bar number marked on the straight-edge.

Cards are numbered at one end progressively before cutting to prevent mistakes; the number on a card and that on the design for picks must always be the same.

The numbered end is the 26 side, and is first pushed between the nipper jaws of carriage *r*; peg and lace holes are cut, then bars from 1 to 26 may be used for design, a bar is left between 26 and 27 for middle lace-holes, and bars from 27 to 51 are for pattern, but with 51 the last peg-hole is cut, and beyond that again the end lace-holes.

CARD-LACING

Before cards are ready for the loom they must be laced into a chain; this is still largely a hand process,

Digitized by Google

although several machines have been invented for the purpose.

For hand-lacing a frame is required with a series of wood or metal pegs fastened in it at both sides to face each other, and at such a distance apart as will suit the width of card to be laced. Cards are placed upon it side by side in proper rotation and held in position by the pegs which pass through both large holes; the lacing is next threaded

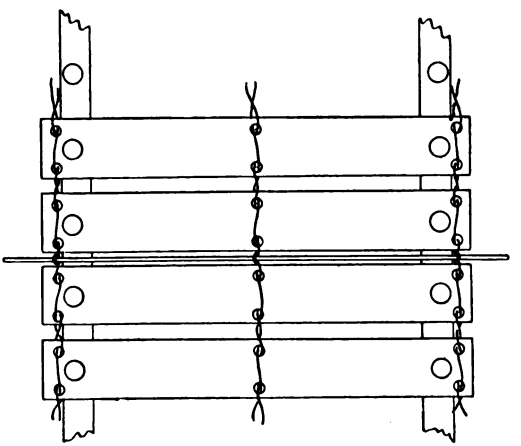

FIG. 139.

amongst the lace-holes with a needle, so that it will be crossed over from right to left between every pair of holes in one card, and also between two adjacent cards, then back again in the same order, as clearly shown in Fig. 139. The defects of this plan are: inequality in the tension of the lacing, an excessive number of knots (for there are rarely more than from 40 to 50 cards between knot and knot in every line of lacing), and the slow speed at which the work is performed.

Digitized by Google

Lacing is of various kinds and is in different conditions when used. Cotton and linen twines, twisted like a rope, are used singly and twofold; they are also used after being plaited to form narrow braid. In some instances lacing is soaped; in others it is steeped in boiled linseed oil; in others, again, it is used from the ball, as delivered.

It should always be in such a condition that it will not vary greatly in length as the atmosphere becomes dry or moist.

Lacing-Machines

Inventors have during the last thirty years endeavoured to construct a satisfactory automatic lacing-machine on the principle of a compound sewing-machine. The writer's earliest experience of such a machine was gained about twenty-five years ago, when an attempt was made to sew the cards together at two or three points simultaneously, by forcing stout sewing needles through the cards and locking their threads on the under side by shuttle threads. The number of stitches in each card, the inequality of the tension on the twine, and the lack of flexibility combined to render the inventors' efforts fruitless. Since that time, however, Count Sparre, Stahlknecht, the Singer Company, Messrs. Reid, Fisher, and Parkinson, and others, have laboured upon the problem with more or less success. Count Sparre seems to have been one of the first to make use of the ordinary lace-holes of a card and to pass the needle threads only through those holes, after which the shuttle threads are linked into needle threads.

By this means machine-lacing does not greatly differ from hand-lacing in appearance, except that in the former the threads are twisted in one direction continually.

Reid, Fisher, and Parkinson have greatly improved the

Digitized by Google

details of a lacing-machine, and have produced one that bids fair to entirely supersede the hand process. With it, 900 to 1000 cards can be laced per hour, and from 400 to 600 without a knot; the tension also appears to be well maintained. When lacing 400^s or 600^s cards, three lock-stitch sewing-machine heads are employed, to pass ordinary lacing through the usual lace-holes only. The cards are fed upon endless chains with small projecting pegs to receive the large holes, and chains and cards are drawn forward at a speed commensurate with the width of card to be laced.

The Singer Company employ two tapes, which they place above and below the card, and stitch all together by forcing needles and thread through them six or eight times in the width of a 600^s card. This system of lacing is firm, but very troublesome where cards have to be frequently altered by adding to, or taking from, their number, as, for instance, in the manufacture of bed and table covers. It is also difficult to remove and replace broken cards.

CARD-WIRING

Cards are suspended from cradles above the loom by straight wires that project about $1\frac{1}{4}''$ beyond both ends of the cards. These wires are placed over the gap between two cards and tied with waxed band to prevent slipping. They should be tied on the face side of the cards in order to keep them from touching the cylinder, or they will give an uneven bed for the cards to rest upon.

Some prefer to push the wires between the two lines of lacing before tying; but, on the whole, it is probably better to adopt the first-named plan. The distance from wire to wire is determined by the vertical and horizontal space

Digitized by Google

available at the loom. Some wires are only 12 cards apart, but 16 to 24 are more general.

Card Cradles

Card cradles consist of two pieces of curved metal secured beneath the Jacquard cylinder in such a manner that cards, as they fall from the latter, will pass inside them. But as the pieces of metal of which it is composed are not more than $\frac{3}{8}''$ or $\frac{1}{2}''$ farther apart than the length of a card, the wires will be caught, and the cards prevented from falling to the floor. The bend of a cradle should be such as will prevent cards from piling up where they drop from the cylinder. And as fresh cards are taken up from the rear of a cradle, those remaining should automatically slide down to take their places, and thus leave a free fall to descending cards.

The sectional shape of a cradle is unimportant; provided sufficient firmness and holding power are given, nothing further is required.

PART IX

LAPPET SHEDDING

is a peculiar system of shedding designed to move whip or warp threads out of their longitudinal positions by bending them until they assume a transverse direction, and after lifting each over a pick of weft, it is fastened at both ends of every horizontal line, but floats loosely between those points. Elaborate figures are beyond the range of lappets, still there are many small effects that can be economically woven by them, such as detached spots,

Digitized by Google

and narrow continuous figures running more or less into stripes. The system imitates embroidery, and permits of various colours and patterns being produced simultaneously on any fabric, but plain or gauze grounds are oftenest employed, because they are least liable to have warp threads disturbed by a side pull.

A lappet loom only differs from one of the ordinary type in having the following additions and alterations—namely, a groove provided in the slay bottom immediately behind the race board, but before the reed, and wide enough to receive needle frames and pin frame. Lappet wheel, whip rolls, and supports are also added. Large cranks of from 6″ to 7″ sweep, together with a slightly longer stretch, are desirable. A separate whip roll is required for each needle frame. They are situated above, below, or in both positions with relation to the warp beam, as may be found most convenient, and separately weighted by cords and small weights.

The reed is moved back from the race board 1½″ to 2″ to leave room for needle and pin frames. It is secured at the bottom by a piece of sheet iron bent to form a semi-circular groove for the reed to fit in, and is bolted at both ends to the slay back; then the slay cap front is bolted behind the swords.

Figs. 140 and 141 illustrate an arrangement of parts designed to weave continuous lappet figures, or spots, in which no portion of a fabric is entirely free from figure throughout its length.

Fig. 140 is a front elevation: *a* are the slay swords, *b* a bracket bolted on the front of *a*. It supports an adjustable stud *c*, on which ratchet and lappet wheels *d* turn freely. Both are either cast in one piece, or if the lappet wheel is made of wood, are bolted together. The latter

Digitized by Google

consists of a cylindrical drum having a series of varying indentations cut in its front edge in such a manner that, as the ratchet is rotated tooth by tooth, feeler *e* will be moved from a ridge to a hollow, or *vice versâ*; *e* is centred on a pin in *b*, midway between the points of contact with *d*, *f*. It is flattened to a knife edge, where it touches the

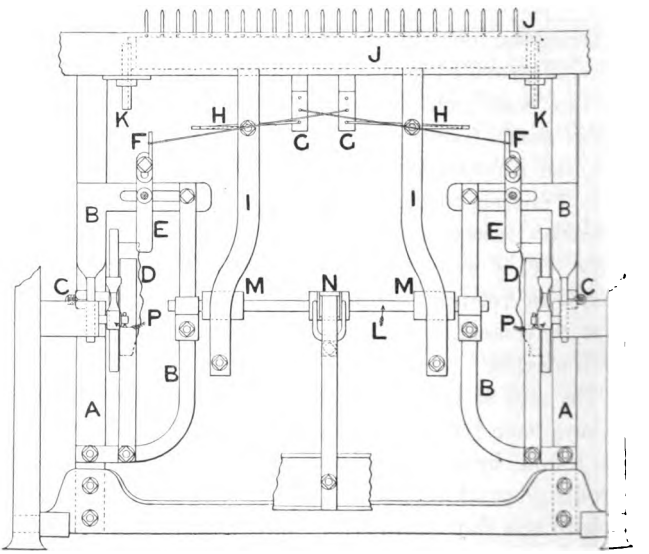

FIG. 140.

lappet wheel; but its upper arm is rounded, and has a cord tied upon it that is carried to, and made fast upon, a short pendent bracket screwed on needle frame *g*. A spiral spring *h*, or a cylindrical piece of elastic, is hooked into pin frame shifter *i* at one end, and made fast to needle frame *g* at the other. The effect of *h* is to hold feeler *e* constantly against the irregular face of lappet wheel *d*; hence, as *d* turns round, *e* vibrates in unison with the

Digitized by Google

ridges and hollows of *d*, and transfers the movement laterally to needle frame *g*, and through it to whip threads that enter the needle eyes.

All the above-named parts are carried backward and forward by the swing of the slay, but the rotation of *d* comes from an adjusting catch, fixed in the end framing,

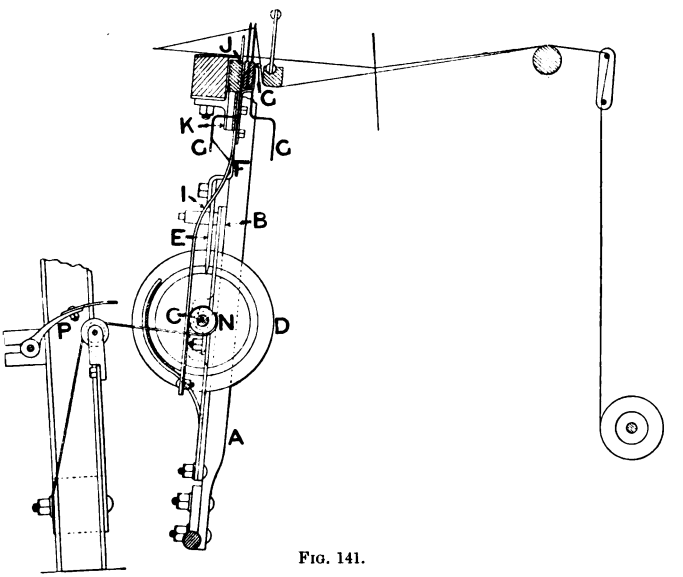

FIG. 141.

and supported by a bracket. As swords *a* move forward with *d*, the teeth of the latter are successively brought into contact with pawl *p*, and rotation to the extent of one tooth ensues.

Lappet wheel *d* is a hollow, built-up cylinder of close-grained wood, $\frac{1}{2}''$ thick, which is filled in at one end to supply a means of fixing it upon the side of a ratchet wheel. Its periphery and front edge are turned true and

Digitized by Google

made smooth, then a metal comb, with pointed steel teeth, equal in pitch to the reed to be used, is pressed against the cylinder as it turns in a lathe, and thus a series of parallel lines are scratched along its surface. After taking the cylinder out of the lathe its periphery must be divided into a number of equal spaces to suit the picks in one

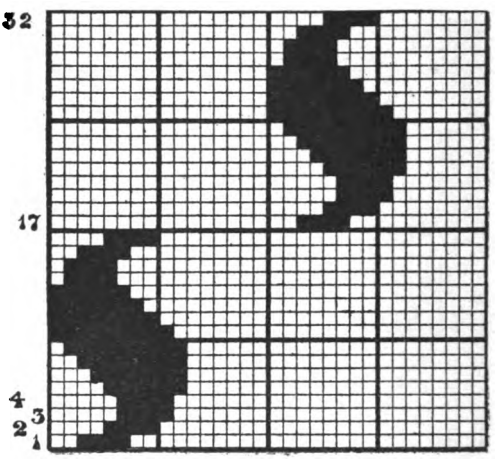

FIG. 142.

repeat of the pattern to be woven, and lines drawn through each point, parallel with the cylinder's axis.

For example, let *a* (Fig. 142) be the design, *b* (Fig. 143) the periphery of the lappet cylinder when opened out, then thin vertical lines *c* are those scratched by the comb teeth. They are indefinite in number, but in pitch each equals the space occupied by two warp threads in the fabric. Thin horizontal lines *d* are parallel with the cylinder axis. Thirty-two horizontal spaces on design

Digitized by Google

paper *a* give one repeat of the pattern, but as each line of whip must be fastened at both ends of every float, 64 picks will equal one revolution of the lappet wheel; hence there are 64 spaces *d*. Thick lines *e'* show the form of teeth required to reproduce pattern *a* on cloth.

In the first horizontal space of *a*, and on the first line of *d*, 2 dents, or spaces, are passed in each case to find the starting-point of the figure, which at 1, *a* floats over 4 dents. It will be seen that 2, *d* is 4 dents lower than 1, *d*. Therefore feeler *e* (Fig. 140) will move the needle frame *g* through that space.

On 2, *a* (Fig. 142), 4 dents are passed, and 4 taken for pattern. On 3, *d*, 4 dents are also passed over; then on 4, *d*, 4 more dents are taken, and so in like manner up to 16, *a*, and 32, *d*, where the first spot ends. At 17, *a*, 18 dents are passed and 4 taken. At 33, 34, *d*, the same order is maintained.

In many detached spots, such as *a*, it is necessary to add binding to each figure by moving whip threads across a single dent immediately before a spot begins and ends, for this has the same effect of preventing whip threads from being pulled out that fastening-off has in sewing. In all such cases extra

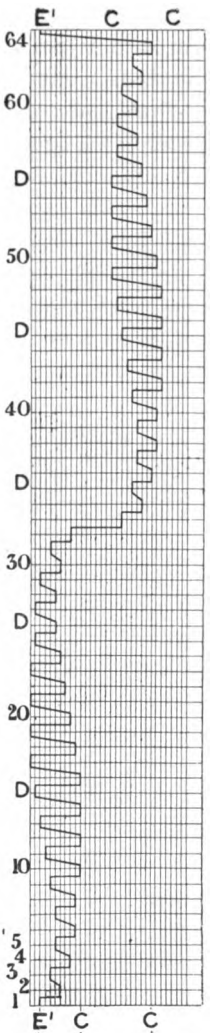

FIG. 143.

Digitized by Google

teeth must be provided in the ratchet, and extra horizontal spaces in lappet wheels, for both equal one pick of weft in the piece.

Great care and accuracy are essential to the proper cutting of a lappet wheel, else the pattern will be defective, but beyond these little more is needed.

A needle frame *g* (Fig. 144) is made of wood $1\frac{1}{2}''$ to $1\frac{3}{4}''$ deep by $\frac{3}{8}''$ thick. Each frame has two horizontal grooves 4″ to 5″ long, cut equidistant from the ends, and generally lined with brass, to fit freely upon flat pins *o*, secured to pin frame *j*, in such a manner that a vertical lift can be imparted without any side movement. A number of steel

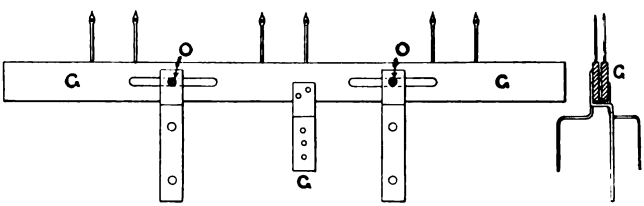

FIG. 144.

or brass needles are driven into the wood and protrude $2\frac{1}{4}''$ to $3\frac{1}{2}''$. They are all flattened at the top, pointed, punched, and made perfectly smooth, to form eyes for the whip threads to pass through. The exact number and positions of the needles are determined by the size of the pattern and the number of times it is repeated on the width of the fabric. Thus pattern *a* (Fig. 142) has 32 dents to a repeat. If the reed has 20 dents per inch, and 37″ of it are filled, $37 \times 20 = 740$ dents occupied by warp. $740 \div 32$ dents per pattern $= 23$ patterns. 37″ of a frame is divided into twenty-three equal parts, and a needle is driven in at each mark. Every frame has two movements—namely, a vertical one to lift whip threads above a moving shuttle,

Digitized by Google

and a lateral one which bends whip threads into a transverse position, and thus forms a pattern.

A pin frame *j* (Fig. 140) is merely a false reed that serves as a background for the shuttle to run against. In form it is not unlike a needle frame, but the pins are $1\frac{1}{2}''$ long by $\frac{1}{8}''$ in diameter. They are pointed at the top, and flattened at the front from tip to base. They are 1″ apart throughout, and driven into the frame so that, when lifted, all will touch the race board and form a true guide for the shuttle. Both ends of this frame are tipped with brass, and slide in grooved brackets *k*, which are screwed to the slay bottom. Each rises above, and sinks below, the point of attachment to the slay.

A horizontal shaft *l* vibrates in bearings bolted on brackets *b*. It carries two pulleys *m*, and one pulley *n*. The former have straps 8″ long by 1″ broad, fastened on their surfaces by set screws, and the otherwise free ends are secured to vertical arms *i*, pendent from pin frame *j*. Pulley *n* has a similar strap 20″ long fastened upon it, but wound in an opposite direction to those on *m*, whence it is led over a guide pulley, and finally bolted to the front rail of the loom. The effect of this arrangement is, that as shaft *l* moves back with swords *a*, the strap on *n* will unwind, and in doing so will wind the straps of *m* upon the surfaces of their respective rollers, and push up pendants *i*, pin frame *j*, and needle frames *g*. A spiral spring, acting through cord connections upon pendants *i*, assists in drawing down all the frames as swords *a* move forward. A frame must invariably be lifted high enough to allow the shuttle to pass under whip threads when the loom cranks are on the bottom centres. With this arrangement, however, it will continue to rise until the cranks are at their back centres. Such additional rise

Digitized by Google

is superfluous, and puts undesirable strain upon the threads.

The following plan for moving needle and pin frames is preferable. Bolt the strap from *n* to a tappet treadle that rests by its own weight upon a cam, and let the full part of the cam unwind strap from *n* and push up pendants *i*. By this contrivance frames are only lifted to the height required, and a minimum of strain is put upon whip threads.

Two or more patterns can be woven simultaneously, but a separate lappet wheel is required for each. For two patterns, another wheel larger or smaller than *d* is situated in a corresponding space on the opposite side of the loom, and connected in the manner already described.

Where both patterns repeat on the same number of picks, and where one is a multiple of the other, two cylinders can be secured to a single ratchet wheel, one inside the other; then by employing two horizontal instead of vertical feelers *e*, each set to be acted upon by different cylinders and connected with separate needle frames, mechanism is not only economised, but a perfect movement is given to the needle frames.

A horizontal feeler is invariably superior to a vertical one, because the latter must move in the arc of a circle, and, as a consequence, will carry different parts of its surface into contact with the lappet wheel, and to a small extent an inaccurate traverse will be imparted to the needle frame. It is also usual to employ an elbow lever and a cam to withdraw all sliding feelers from the surfaces of lappet wheels before rotation commences, and thus much friction and wear are saved.

Instead of using a cylindrical drum, such as *d* (Fig. 140), a disc, drilled at regular distances with holes arranged to

Digitized by Google

form one or more circles, may be substituted, and one or more patterns will be formed by securing pins of various lengths in the holes. Such a wheel has the great advantage of permitting a large number of different designs to be woven by simply readjusting the pins. Also, that one disc can be driven at different speeds to accommodate patterns of different lengths, provided the disc holes are a multiple of the design.

One of the most important points to be attended to in lappet-weaving is the regulation of tension upon whip threads, and very delicately adjusted wires are provided for this purpose.

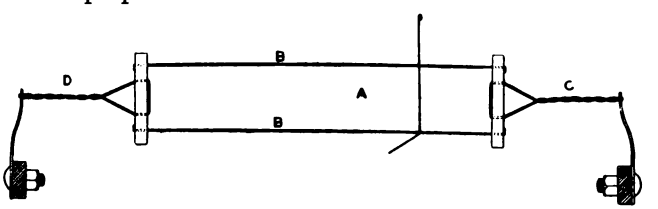

FIG. 145.

The threads from whip rolls are led between spring cords and healds under the reed and through the needle eyes. Spring cords *a* (Fig. 145) consist of two wooden end-pieces $\frac{1}{2}''$ thick by 4″ long and 1″ wide, into which two wires *b*, that are long enough to reach across the warp, are driven, and secured 3″ apart and parallel. Two holes are drilled in both end-pieces $\frac{3}{4}''$ on each side of their centres, and cords *c*, *d* are threaded through them, twisted, and tied upon one of two flat springs that protrude from the loom framing. Then, as the whip threads pass in front of the upper and behind the lower wires *b*, it follows that the degree to which cords *c*, *d* are twisted determines their power to readily give off or take up whip in unison with

Digitized by Google

the rise and fall of the needles. It is a nice point to adjust tension so as to prevent strain and still hold the threads tight.

The foregoing lappet mechanism is not in such extensive use as the Scotch type; nevertheless, it is well adapted to the manufacture of continuous patterns, and has one very important advantage to recommend it—namely, that every added part is inside an ordinary loom framing, and consequently no additional floor-space is needed.

The essential features of a Scotch lappet loom are: That needle frames are moved vertically in, and horizontally by, shifter frames; that a large wooden wheel, with a groove cut in one side to receive a feeler or peck, is rotated through a space of one tooth on alternate picks; that shifters are moved by the dead weight of a lever hanging first on one, then on its other end, and through a space equal to the width of slot in the lappet wheel; also, that all upward movement comes from cams.

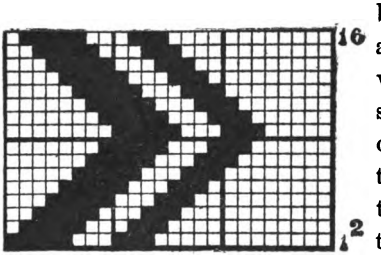

FIG. 146 (*a*).

Such a lappet wheel is situated on one side of a loom beyond the fabric, and swings with the slay. It has an irregular groove cut in one of its sides to limit the lateral movement of a needle frame. This wheel is of wood; sycamore, or some other close-grained hard timber is preferable. Its diameter is not of great importance, provided it does not revolve so rapidly that the groove becomes worn by frequency of contact with the peck at any one place.

Digitized by Google

After the wood has been turned to the size and thickness required, a comb with a pitch, generally equal to half that of the reed, is pressed against the revolving disc to describe a series of concentric circles on one of its sides. The circumference is next divided by radial lines into as many equal parts as there are horizontal spaces on the

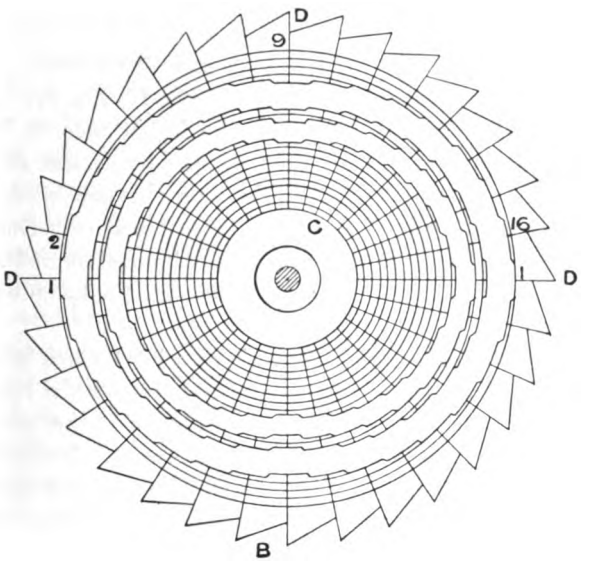

FIG. 146 (*b*).

design (see Figs. 146, in which *a* is the design, *b* the lappet disc, *c* concentric circles, *d* 16 radial lines corresponding with the 16 horizontal spaces of design *a*). Each space between 2 radial lines equals one tooth in *b* and two picks of weft in the fabric. A vertical space in *a* represents two, and a circular space *c* four warp threads. By comparing *a*, *c*, it will be found that number 1 and following numbers agree in space between extreme

Digitized by Google

points, after a fixed allowance has been made at *c* of four threads for the thickness of the peck. A groove must be cut in *b* to the exact dimensions of the thick marks.

Two patterns can be woven from one wheel by cutting a second groove inside or outside the first one as shown, but beyond this a new wheel is needed for a new pattern.

A wheel *b* has a tooth cut on each space between 2 radial lines *d*, and it is negatively turned by a flat iron catch that is grooved to permit the inside edge of *b* to pass through, then as the solid upper part of this catch comes into contact with the wheel on alternate picks, a forward movement of one tooth takes place immediately the cams employed to slide the needle frames are midway in their lift, because at that point all strain is taken from the peck.

Movement is given to the catch by a bowl which works on one side of a needle frame cam and depresses a lever; the latter acts through a spiral spring upon the catch; the spring is employed as it expands in case of obstruction, and prevents a smash. When weaving intermittent lappet figures, a sliding connection is made on this lever that enables it to be stopped and started at pleasure.

A horizontal traverse is given to a needle frame by means of two cams fitted on the extreme ends of the tappet shaft in such a manner that when the full side of one is at the top the full side of the other is at the bottom. Two small levers rest by their own weight on the cams, and from their forward ends straps are taken over guide-pulleys and made fast to opposite ends of a shifter. The latter is a frame, with two upright arms grooved on the inside for the ends of a brass-tipped needle frame to fit in and slide

Digitized by Google

up and down without any end movement. A shifter is connected by an adjusting piece to the peck that works in the groove of a lappet wheel. A shifter lever must be sufficiently heavy to move a frame horizontally when the thin part of a cam is uppermost, but the width of groove in the lappet wheel determines how far movement shall be carried, for a lever can only cause a shifter to slide so long as the peck has space to move in; immediately the latter touches one side of the groove, the weight of a shifter lever is sustained by the shifter, until at half the lift of a cam it is removed.

Lateral movement begins when all needle points are below the bottom line of warp, and the reed in moving forward is approximately $\frac{1}{2}''$ from the fell of cloth; it must end before the vertical movement begins—namely, before the reed has traversed in its backward direction $\frac{1}{2}''$ from the beating-up point, and the needles should be fully lifted when the pick is delivered.

The consumption of whip always largely exceeds the length of cloth woven, but the exact amount depends entirely upon the pattern.

To estimate the length of whip required for a given length of fabric, the design must be counted to find how many dents the figure covers at each traverse of the needles; and when the sum of all movement is obtained—

$$\frac{\text{The number of dents per pattern} \times \text{the needles in a frame} \times \text{the repeats of pattern in one yard of fabric}}{\text{dents per inch in reed} \times \text{inches per yard}} = \text{yards of whip for one yard of cloth.}$$

Take as an example, *a* (Fig. 142), in which there are 32 horizontal lines of whip, 23 needles in a frame, 20 dents

Digitized by Google

per inch in the reed, and 40 picks of weft per inch in the fabric.

The lines of whip vary in length as follows:—

Number	1 = 4	dents.
,,	2 = 4	,,
,,	3 = 4	,,
,,	4 = 4	,,
,,	5 = 6	,,
,,	6 = 7	,,
,,	7 = 8	,,
,,	8 = 9	,,
,,	9 = 9	,,
,,	10 = 8	,,
,,	11 = 7	,,
,,	12 = 6	,,
,,	13 = 4	,,
,,	14 = 4	,,
,,	15 = 4	,,
,,	16 = 4	,,
Total		92 dents in the first half of

the pattern, and an equal number in the second half. To these must be added 10 dents passed over in moving from the first to the second spot, and 22 dents in moving from the end of number 2 spot to the beginning of the first spot in the next repeat. Altogether, $92+92+10+22=216$ dents. To find the number of repeats of pattern per yard of cloth—

$$\frac{\text{40 picks per inch} \times 36'' \text{ per yard}}{\text{64 picks per pattern}} = 22\tfrac{1}{2} \text{ patterns.}$$

$$\frac{\text{216 dents} \times \text{23 needles} \times 22\tfrac{1}{2} \text{ repeats per yard}}{\text{20 dents per inch} \times 36'' \text{ per yard}} = 155\tfrac{1}{4} \text{ yards of whip for one yard of cloth.}$$

Digitized by Google

PART X

PICKING

Picking mechanism is constructed and timed to follow shedding, and the operation consists in passing a shuttle containing weft between the upper and lower lines of warp.

With the exception of a few experimental looms, the method adopted during many centuries by weavers of all countries was to take the shuttle in one hand, throw it through the shed, and catch it with the other hand as it emerged from the opposite side; but in 1738 Kay, of Bury, introduced what was known as the "fly shuttle"; it was simply an addition to an ordinary slay of boxes placed at opposite ends for the reception of a shuttle. A box consisted of a bottom, two sides, and one end. Over each box, and extending its entire length, a metal spindle was fixed, having a diameter of about $\frac{3}{8}''$, for the purpose of guiding a picker or driver employed to propel the shuttle. Both drivers were connected by cords to a wooden handle known as the picking stick, which the weaver grasped with his right hand, and by making a rapid lateral movement of his arm, the shuttle was jerked with sufficient force to ensure it entering the opposite box.

Kay's invention was slow to find favour with weavers of his own time, but when once adopted, it soon displaced the older method, and became almost universal.

Constructors of modern looms have principally confined their attention to improving and altering Kay's invention to suit the new conditions which were introduced with steam as motive power. It is indeed difficult to imagine a

Digitized by Google

better or simpler all-round motion; still, with these advantages, picking remains the weak point in a loom. Experience has proved it to be uncertain in action, costly to keep in order, and by far the most dangerous part of the machine. More serious accidents result from defective picking than from all the remaining parts of a loom put together; notwithstanding the fact that throughout an entire century inventors have laboured to remove the most objectionable features; their efforts have entailed the spending of large sums of money in developing and patenting so-called improvements and safeguards to prevent accidents to work-people, breakages of machinery and warp.

These inventions include a host of picking motions, shuttle guards, swells, check straps, fast and loose reed appliances, pickers, and an endless variety of details connected with picking, many of which are evidently the result of a misconception of the problem, for they attempt to deal with the effect instead of the cause.

To fully appreciate the defects that are liable to be developed by a negative propelling motion, attention must first be directed to the shuttle itself, which is made from hard, smooth wood, pointed at both ends, and tipped with steel; it is hollowed out in the centre for the reception of weft, the latter being used in the form of a cop, wound upon a wooden pirn or a paper tube, and pressed upon a metal tongue in the shuttle, that is hinged at one end and extends almost the entire length of the hollow part. This tongue retains the weft in one position during the operation of weaving, and allows it to be drawn away as a continuous thread through an eye fixed in the front of the shuttle.

The rapidity of motion in a shuttle, together with an imperfect controlling force, is the chief cause of serious defects in the working of ordinary picking motions; but

Digitized by Google

it remains for us to analyse the various forces which tend to divert a shuttle from its true course.

Weight affects its movement, for a study of mechanics teaches us that the energy possessed by a moving body varies in proportion to its weight and the square of its velocity; hence, as a shuttle loses weight each time it moves across a loom equal to the weight of weft drawn away, a proportionate diminution of force takes place, and any obstruction is more liable to divert a light than a heavy shuttle. Therefore, unless an almost empty shuttle is heavy enough to overcome every resistance, and pull its weft close to the selvage of a fabric, there will be a constant risk of flying out, and this is the evil most feared by weavers. The drag of a coarse weft as it passes off at the shuttle eye being greater than that of a fine thread, necessitates a change from a light to a heavy shuttle when an alteration is made from a thin to a thick weft.

The position of the centre of gravity with relation to the direction of force employed to propel a shuttle has an effect upon its motion.

The centre of gravity has been defined as a point which does not change its position in a body when that body is turned in any direction; and further, if a body free to move in any way is subjected to a blow, motion will be in the direction of the straight line in which the blow is delivered, provided the line passes through the centre of gravity; but unless the force acts through the centre of gravity, the body will not merely move as a whole, but it will revolve.

A shuttle is not free to move in any direction, still it moves at a high velocity without being under positive control, and it is therefore imperative that the force employed to move it, and the parts used as guides, shall

Digitized by Google

act to minimise any tendency to rotate, or, in other words, to fly out.

For the moment let it be assumed that a shuttle is a parallelogram, having its centre of gravity at the centre of the body (see Fig. 147). If force *d* passes through the centre of gravity *c*, and parallel to all sides, two of which

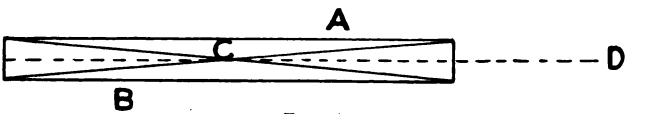

FIG. 147.

are shown at *a*, *b*, movement will be straight without the aid of guides; but the slightest obstruction, such as rough, knotty, or entangled warp, will be sufficient to set up a rotary motion.

If the line of force does not pass through the centre of gravity, then the distance between centre of gravity and line of force represents the leverage which will be exerted to produce rotation (see Fig. 148), where *a*, *b* represent two

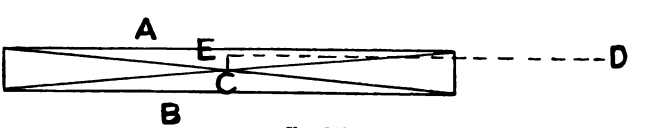

FIG. 148.

sides of a rectangle, *c* its centre of gravity, *d* the line of force, and *c*, *e* leverage.

Rotation can be checked by placing guides, say reed and race board, against those sides of the rectangle farthest from the line of force; for this reason some textile experts advocate placing the shuttle tips a little nearer the top and front than the back and bottom; or so constructing a shuttle that the line of force shall be above and before the centre of gravity. By so doing it is argued that

Digitized by Google

pressure will be exerted against reed and race board, and the tendency to fly up or forward will be checked at a slightly increased cost of friction and power; the latter are small matters compared with the risks attending a shuttle flying out. Other experts advocate placing a shuttle tip as near the race board as possible, in order that it may pass beneath entangled warp, and thus prevent an upward movement in the shuttle. Both points are worthy of consideration.

It has been assumed that the centre of gravity in an ordinary shuttle occupies a fixed position, but careful con-

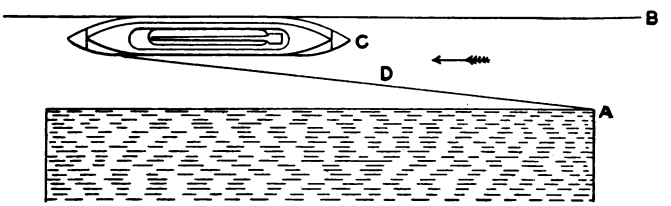

FIG. 149.

sideration of the problem will lead us to the conclusion that it is a constantly changing point, for if when a shuttle is loaded with weft its centre of gravity is at the centre of its mass, every time it is driven across the loom that point is moved slightly back in proportion to the weight of weft drawn away, because weft is invariably pulled from the forward end of a cop; hence, as weaving proceeds, the front of a shuttle becomes lighter, but the back is unaltered until the cop is about half drawn off. The alteration may not be great, still it is one of the many small things that tend to make the whole system of picking uncertain.

When weft is passing through the eye, a side pull of varying intensity is exerted upon the shuttle, this also

Digitized by Google

has a tendency to pull it out of a straight line. By a reference to Figs. 149 and 150, in which the arrows indicate the direction of motion, *a* the fell of cloth, *b* the reed against which shuttle *c* moves, *d* the weft running diagonally between *c* and *a*, it will be obvious that any obstruction to the free passage of weft through the shuttle eye will, in Fig. 149, tend to draw the front of *c* from *b*, and cause it to fly out; whilst in Fig. 150 the forward end of *c* will be pressed against *b*, and slightly reduce the above-named tendency. This is due to placing the eye of

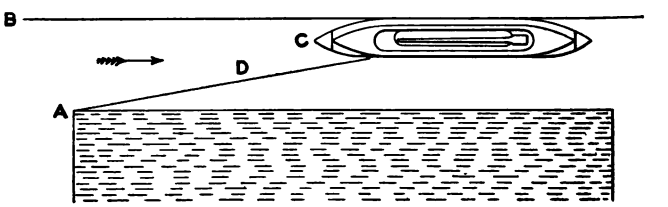

FIG. 150.

c out of the centre, but the effect in either case will be in direct proportion to the intensity of such pull.

It is well known that weft is less free to pass from a shuttle eye when a cop or pirn has nearly given out than when full, which is accounted for by the presence of a coarsely-pitched coil of weft found between the unused cop and the tip of the shuttle tongue in the former, and the absence of coils in the latter. Every coil puts additional tension upon the weft, and as a result we find the straight motion of a shuttle modified in a twofold degree: first, by a reduction in weight, which results in a reduction of force; and secondly, by the increased power of the diagonal pull being exerted when the shuttle is least capable of resisting it.

Digitized by Google

In the next place, the actual movement of translation must be considered. It has been previously mentioned that the two guides of a shuttle are the race board, upon which it rests, and the reed, against which it presses; both forming parts of the slay, and swinging on a centre by the action of cranks and connecting arms. It follows, therefore, that a shuttle partakes of this swinging motion in addition to its own of translation.

Fig. 151 is a diagrammatic representation of the above-named parts: *a* is the shuttle, *b* the slay bottom, *c* the reed, *d* a sword which moves partly round the centre of rocking-shaft *e*, *f* a connecting arm, *g* a crank, *h* a dotted line showing the circular path of *g*.

When a shuttle begins to move, the various parts occupy positions corresponding with the solid lines; the slay is in motion, and continues to be pulled back until crank *g* reaches point 2 in the periphery of circle *h*, where a slight pause takes place for reasons that are fully dealt with in Part XV. The position of each part at this time is indicated by the same letter, with the addition of a dash against dotted lines.

It will also be noticed that when the sword is at *d'*, all the parts are in a lower plane than at *d*; the fall of the slay bottom being indicated by the space between lines 4 and 5. In consequence of which, during the movement of slay from *d* to *d'*, the shuttle has been travelling across the loom, moving back, and falling with the slay; but when crank *g* moves round point 2, the shuttle simply continues to pass across the loom. After leaving that point it moves up and forward with the slay until it finally reaches the opposite shuttle box.

Fig. 152 will further elucidate the aggregate motion of a shuttle. Let line *a* represent the width of loom,

Digitized by Google

d the backward movement of slay; it will then be found that a shuttle, in passing from one side of a loom to the

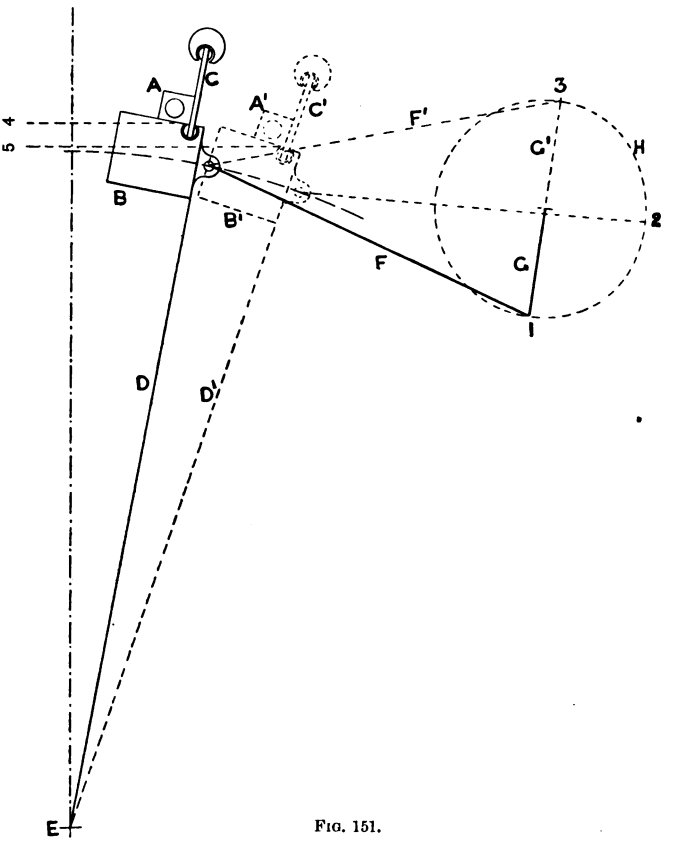

FIG. 151.

other, moves diagonally from 1 to 2, straight from 2 to 3, and in the opposite diagonal from 3 to 4.

But this does not show all its motions, for the fall and rise are not taken into account. In Fig. 153, *a* equals

Digitized by Google

width of loom, 4 and 5 the fall of slay. The shuttle falls from 1 to 2, moves straight from 2 to 3, and rises from 3 to 4.

Add to the above-named modifying influences that a shuttle begins its journey when a slay is moving back at nearly the same speed as a point in the periphery of circle

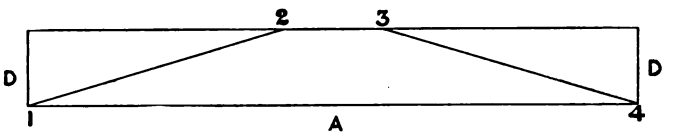

Fig. 152.

h (Fig. 151); but as the crank approaches point 2, the velocity of slay is rapidly reduced, until at 2 a pause is reached, then from 2 to 3 an increase in velocity proportional to the decrease from 1 to 2 is made. A shuttle, therefore, partakes of many variations in velocity and direction, but they do not all necessarily tend to throw out the shuttle. On the contrary, some of them may assist in reducing such a tendency.

For example, when a shuttle begins to move across, it is also travelling back with the slay at its greatest velo-

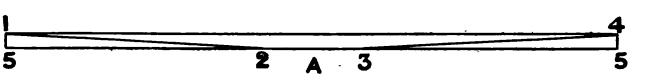

Fig. 153.

city, and if at such times reed and box back were removed, the shuttle would continue to travel in the same direction; but the rapid checking of the slay's speed causes the shuttle to press against the reed with a force proportionate to its weight and acquired momentum, and this to some extent minimises its liability to fly out.

If due consideration is given to these points, it will

Digitized by Google

reveal the existence of many things that tend to render motions for throwing a shuttle less efficient than is generally supposed, and it will become obvious that moving such an apparently simple article as a shuttle presents a complex problem for solution.

Before attempting to describe the varied mechanism used to propel a shuttle, it will be best to first determine what features may be considered as essential to a good motion, for then the relative values of such parts can be more readily estimated. In the absence of a better definition, the following points are suggested as essential to a good pick :—

(1) Power consumed.

When a shuttle is negatively driven, an enormous waste of power results, partly on account of the impossibility of accurately gauging the force required, and partly because the best of motors is liable to variations in speed.

A shuttle must never be permitted to rebound after reaching a shuttle box, for which reason swells are employed in such a manner that it has been affirmed that the force required to drive a shuttle into or out of a shuttle box is equal to that required for driving it through a shed. On this assumption three times the actual power required for useful work performed is taken from the engine, and twice the necessary power must be created by springs or other appliances.

For example, let the force required to pass a shuttle across a loom be represented by one unit of work; then to drive it out of number 1 box a second unit is employed, and to drive it into number 2 box a third unit must be provided, hence 2 units are wasted to 1 profitably employed. These 2 units are spent in annihilating 2 other units stored in brakes or springs, consequently 5 units of

Digitized by Google

work are consumed, and 4 of them are wasted each time a pick is delivered. Even assuming that more force is required to drive a shuttle through the warp than to drive it into or out of a box, the force wasted still largely exceeds that usefully employed; and in a weaving shed containing hundreds of looms the waste is simply enormous. Therefore the first proposition is: that as weight of

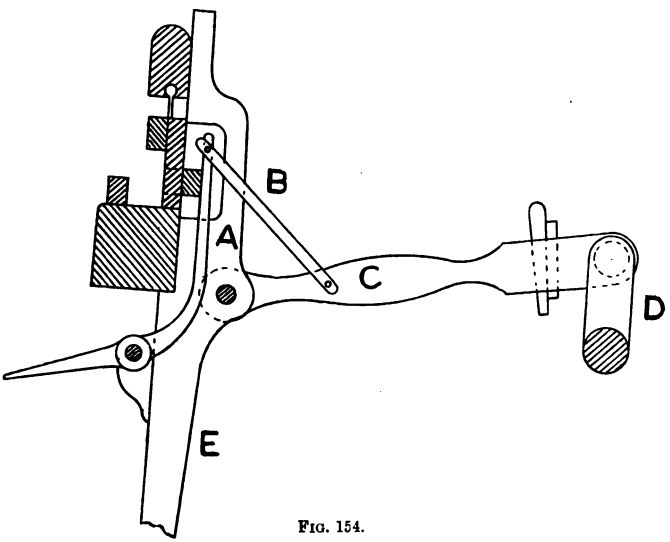

FIG. 154.

shuttle and time taken to move it are the main factors, force in excess of that required to pass a shuttle across in the time allotted should not be employed.

Fig. 154 illustrates one of the many attempts that have been made to reduce this waste of power, and also shows in what direction inventors have sought for improvement; it is a contrivance for taking pressure from the shuttle on leaving a box: *a* is the swell lever, to one end of which

Digitized by Google

strap *b* is attached, and its opposite end is bolted upon connecting arm *c*; *d* is a crank and *e* a slay sword. As arm *c* is depressed by the rotation of crank *d*, strap *b* tightens and pulls back swell *a*, thereby relieving the pressure upon the shuttle.

If such an appliance can be considered as satisfactory, the ultimate saving of power cannot be great; it is represented by the difference in leverage between the points of contact with the swell lever *a*; the shuttle acts at the lower, and the strap at the higher point; beyond this it merely results in diminishing the power consumed by the pick and increasing that of the slay.

(2) A desirable motion.

The movement of a negatively-driven shuttle is essentially a jerky one, and frequently produces the most disastrous results; for its velocity is developed suddenly, and is greatest where most defects are likely to be found; that is, as it enters the shed, which at this time, if fully open, will, as the reed moves back, give considerably more room for the shuttle to pass, and granting that obstructions are less likely to throw a shuttle out at this place than at others, there is still a great tendency to break the warp. Again, the power required to develop a high speed suddenly is greatly in excess of that required to develop it gradually.

The second proposition is, therefore, that a shuttle should begin to move slowly, and develop speed up to the slay centre; then, from that point, a corresponding decrease should take place, until a final pause is reached at the opposite side.

(3) A positive motion.

Nearly all the serious accidents that occur in a weaving shed result from shuttles flying out; this is due

Digitized by Google

entirely to negative picking; and as the preceding proposition necessitates the application of a positive motion, the results of which would be the absolute safety of workpeople, a considerable saving in power, a great reduction in breakages, and a consequent cheapening of production.

The third proposition is that a shuttle should be under such complete control throughout its entire movement that loom and shuttle would start together, irrespective of the position of the latter when the former was brought to a stand.

(4) Altering the speed of a loom.

All weavers know that if the speed of a loom is variable, the power of the pick is altered to such an extent as to cause the loom to knock off; if its speed is accelerated the shuttle rebounds, through excessive force; and if retarded, it does not reach the opposite box, owing to insufficient force. A similar effect is noticed if two shuttles of unequal weight are used in a loom, when, if the pick is correctly set for the light shuttle, the heavy one will be driven with violence against the opposite box end; but if the pick is set for the heavy shuttle, the light one will barely reach its destination.

As this is a serious and one of the most obvious defects of negative driving, the fourth proposition is that picking mechanism should be so constructed that force remains constant, no matter how the speed of loom is altered.

(5) Principal motions connected.

Smashes are of frequent occurrence through shedding, picking, or box motions working independently of each other; to obviate which is the object of the fifth proposition—namely, that positive connections should be made to prevent one from getting out of time or rotation with the other.

Digitized by Google

The writer is fully conscious that few picking motions now in use are capable of accomplishing the task demanded on the preceding pages, but the student must seriously consider whether a piece of mechanism which gives the shuttle a blow and then leaves it without further control is true in principle or economical to work. Also to what extent the application of a guard to prevent such a shuttle from flying out is an attempt to deal with the effect instead of the cause.

The mere enumeration of the requirements of a picking motion is sufficient to show that a formidable problem must be solved before a truly satisfactory pick is obtained; and an analysis of the defects arising from inattention to the points already mentioned will reveal the pressing need for improvement.

Attention has been almost constantly directed to this subject, and numerous motions have been put upon the market from time to time, some of which are negative, others are positive in action. The former are of three kinds—namely, under, over, and pick and pick motions; the difference between an over and an under pick mainly relates to the position occupied by the picking arm fulcrum which, if entirely below the shuttle boxes, is known as an under-pick, but when some portion of it projects above the boxes the motion becomes an over-pick. Of under-picks there are, *a*, those that deliver the blow from the bottom shaft, and *b*, those that deliver it from the crank shaft. In most of the motions included in division *a* it is possible to shape the piece struck to impart more of a push than a blow to the shuttle, and when this can be satisfactorily accomplished the best results are obtained; it must, however, be admitted that less attention has been given to this matter than it deserves, and as a consequence, it may be generally

Digitized by Google

affirmed that such under-picks when compared with over-picks consume more power, work less smoothly, and the risks of shuttles flying out are greater.

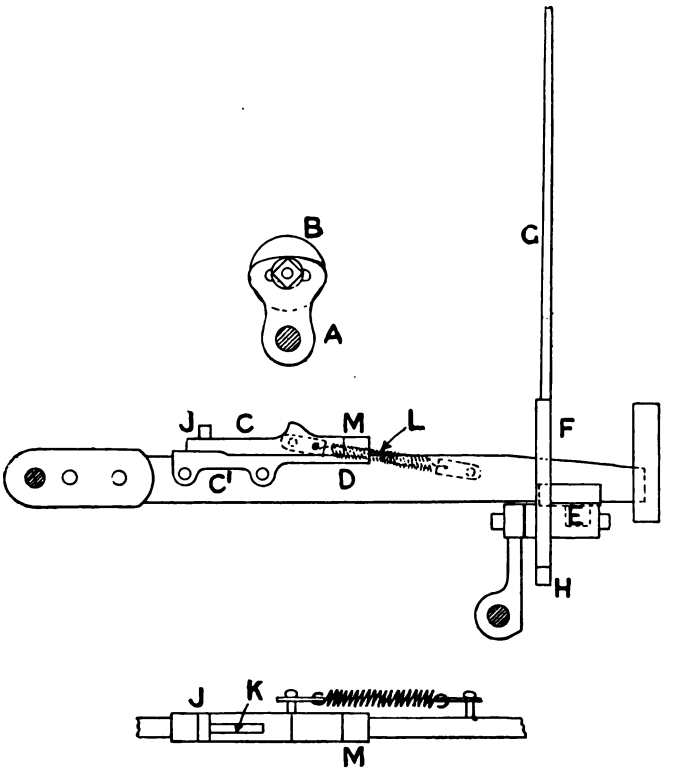

FIG. 155.

Pick and pick motions are applied to looms that have a series of boxes at each end, and where two or more shuttles require to be driven from one side of a loom before any are returned from the opposite side. They allow a single

Digitized by Google

pick of any colour of weft to be passed through a shed which is rarely attempted with alternate picking. Most of them are modifications of alternate picks, and can be converted without making important changes at small cost, but others require the addition of numerous parts.

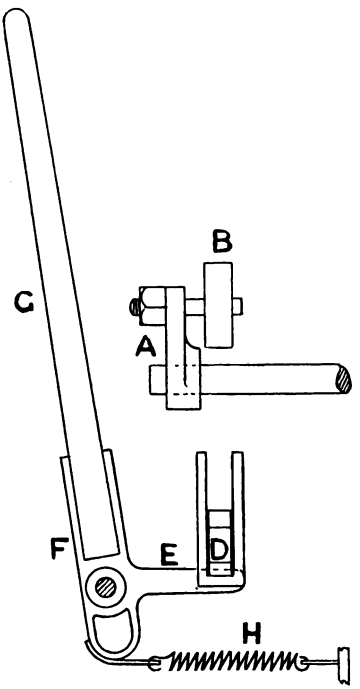

FIG. 156.

The lever pick is one of the best known under motions; it consists of an arm *a* (Figs. 155 and 156) fastened upon the bottom shaft, to carry an adjustable stud and bowl *b*. At one part in the rotation of *a*, bowl *b* comes into contact with a curved metal plate *c*, bolted to a wooden lever *d*, that is fulcrumed outside, and near the back of the end framing; at its forward end it rests upon an arm *e*, projecting from shoe *f* of the picking arm *g*; this arm has its fulcrum pin fixed in a bracket on the rocking-shaft and swings with the slay, *g* passes through a slot in the shuttle box bottom and has a leather picker dropped over its upper end; a wooden or iron rib on the top of a shuttle box prevents the picker from flying off.

When bowl *b* strikes the picking plate *c* lever *d* is depressed; the picking arm and picker are tilted over, and

Digitized by Google

the shuttle is driven across; spring and strap *h* pull back arm *g* to its normal position.

It will be understood that duplicate parts are placed at the opposite end of the loom to drive the shuttle back again, also that when the pick is acting at one side it is inoperative at the other.

If a loom has two or more shuttles, picking arm *g* passes through a slot in front of the boxes, a buffalo-hide picker is dropped over it, and a guide spindle is pushed through the picker.

A further alteration is made in picking plate *c*, with a view of preventing shuttles from being thrown out of the boxes when the cranks are turned backward.

It acts as follows:—*d* is the lever, *c'* a plate bolted upon it, *c* a sliding picking plate through which bolt *j* passes, and slot *k* serves as a guide for *c*. When the loom is running in its ordinary direction, plate *c* is pulled by helical spring *l* against a fixed shoulder *m*, and the pick is delivered in the usual manner; but when the loom is reversed, the bowl strikes the full side of *c*, distends spring *l*, and plate *c* slides along the surface of *c'* without depressing lever *d*, and consequently without moving either picking arm or shuttles.

It is of the utmost importance that picking plate *c* shall be correctly curved, but before this can be done it is necessary to fix upon the length of lever *d*, the relative positions of picking shaft and lever centres, the time allowed for picking, the depression of lever *d* at its point of contact with bowl *b*, and the ratio of depression.

If the following dimensions are assumed:—namely, centre of picking shaft to bowl centre 4″, bowl $1\frac{5}{8}$″ radius, centre of shaft to centre of lever pin 15″,—the time for delivering the blow usually varies from $\frac{1}{8}$ to $\frac{2}{15}$ of a pick; $\frac{1}{16}$ of a

Digitized by Google

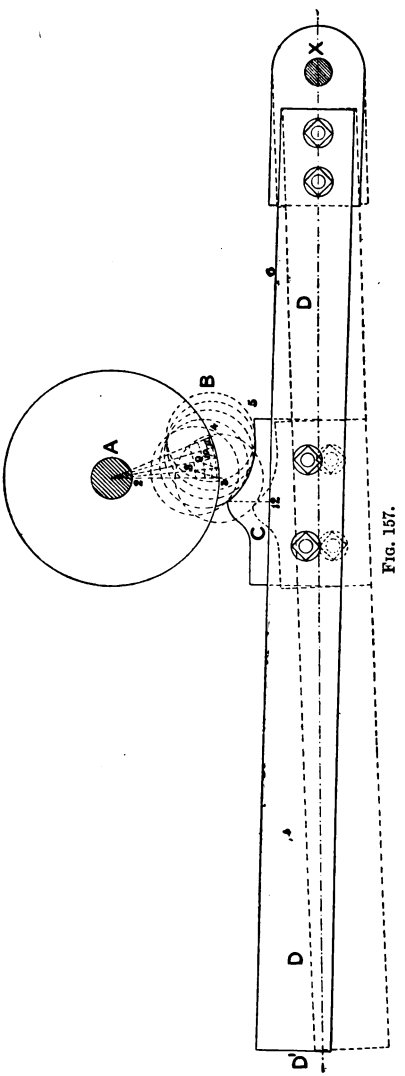

Fig. 157.

revolution of picking shaft will be taken here; thickness and length of picking plate 1″ by 6″; length and depth of lever *d* 36″ by $2\frac{3}{4}$″; depression of lever at point of contact depends partly upon length of shuttle box, partly upon position and form of connection with shoe of picking arm, say 1″; ratio of depression 1, 2, 3, 4, in equal times because lever *d* must begin to move slowly, and rapidly increase in velocity until the end of a pick is reached.

We are now in a position to proceed with the construction of a picking plate. Fix the position of shaft centre *a* (Fig. 157), describe a circle with a radius of 4″ to trace the path of bowl centre. Drop a vertical diameter line 2, 3, and from 3 divide circle 1 into sixteen equal parts; also divide space 3, 4 into four equal parts. Round point 4 describe bowl circle *b*, $1\frac{5}{8}$″ radius; draw the upper line 5 of picking

Digitized by Google

plate *c* at right angles to line 2, 3, and touching the periphery of bowl circle. Show the thickness of plate by making a second line 1″ below and parallel with 5. Next find the centre line of lever *d* and fix pin centre × by producing a line at right angles to 2, 3, and half the depth of *d* below line 6, $= 2\frac{3}{4}'' \div 2 = 1\frac{3}{8}''$. To find centre ×, continue line 2, 3 to the centre line and mark off 15″ to the right, and 21″ to the left will give *d'* the extremity of lever; complete it. With ×3 as radius describe arc 8, and from the same centre, through each point formed by a radial line in division 3, 4 intersecting circle 1, describe arcs 9, 10, 11. From point 3 on arc 8 cut 1″ to equal the fall of lever *d* and divide it into ten equal parts; then, with *a* as centre, describe concentric arcs cutting points 1, 3, 6, 10, to give the ratio of depression. From 4 take as bowl centres each point in succession, where the arcs, concentric with *a*, cut arcs 11, 10, 9, 8, and describe corresponding circles. Trace a line touching the periphery of each, and it gives the correct curve, cut off the curve at a point 2″ above lever *d*, drop perpendicular 12, draw any curve on the opposite side, then make plate *c* 6″ long by taking 3″ on each side of 12, and the picking plate is complete.

The lever pick is much used as a pick and pick motion for silk weaving, because it is clean, simple, easily altered, and capable of throwing shuttles in a very irregular order.

Figs. 158, 159, and 160 give respectively plan, front and back elevations of this motion. Two arms, both furnished with two bowls, are keyed upon opposite ends of the bottom shaft, and either can be made to strike or miss one of the picking plates *c* any number of times in succession. The latter are pivoted at *n*, and the rear end of each is connected by bar *o* in such a manner that one is resting on and parallel with lever *a*, whilst the other is moved from

Digitized by Google

that part of its lever where a bowl would otherwise strike it.

The mechanism for governing picking plates *c* consists of a slide wheel *p*, which is set-screwed on the bottom shaft, and has on one of its sides a bead with two breaks exactly opposite each other; in the centre of each break a stud is fixed to come into contact with a notch of an eight-sided star wheel *q*, and cause *q* and a chain barrel, of which it

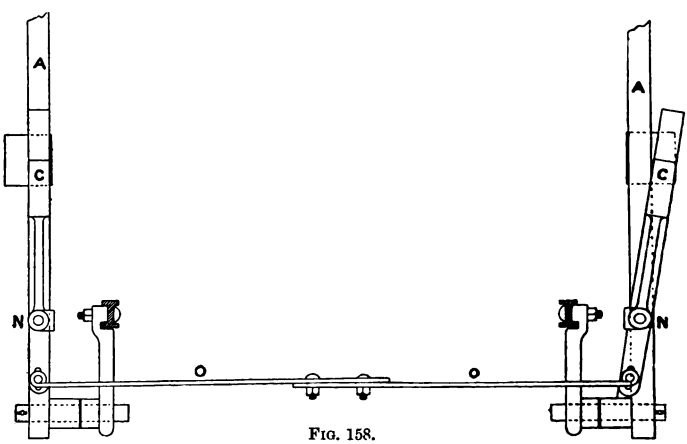

FIG. 158.

forms a part, to partially rotate on a stud inside the framing.

Chain *r* is built up of thick and thin links to suit the required order of picking; it is passed round and turns with the barrel one link every pick.

Lever *s*, also centred inside the framing, carries bowl *t*; the latter is pulled upon chain *r* by a spiral spring *u*, and rises or falls as the link beneath it is thick or thin.

Bell crank lever *v* moves on a stud in the back rail, and is connected by a link to lever *s*. A stud connects *v* with

Digitized by Google

bar *o*, therefore, as lever *s* moves up and down, one picking plate *c* is pushed out of striking position, and the other

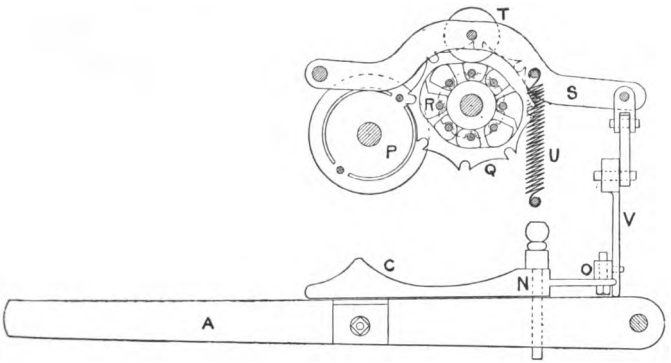

FIG. 159.

plate pulled under a bowl. Any desired order of throwing the shuttles can be attained by laying the chain to suit it.

Figs. 161 and 162 show respectively plan and elevation

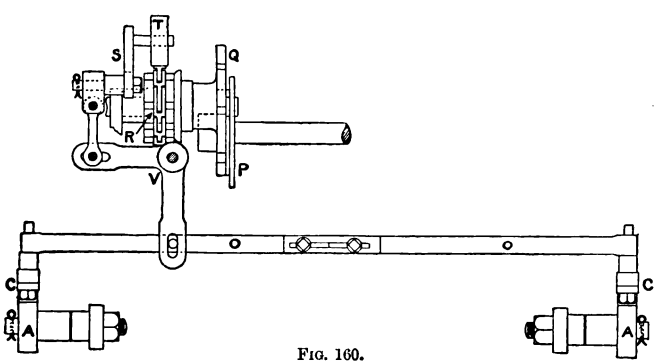

FIG. 160.

of Jackson's pick, which also delivers its blow from the bottom shaft *a* by an arm *b*, having at its outer end an antifriction roller *c*, that is carried by the rotation of shaft

Digitized by Google

a against the under side of picking finger d; the latter is keyed upon a short shaft e placed at right angles to and with its axis in the same horizontal plane as shaft a; e is

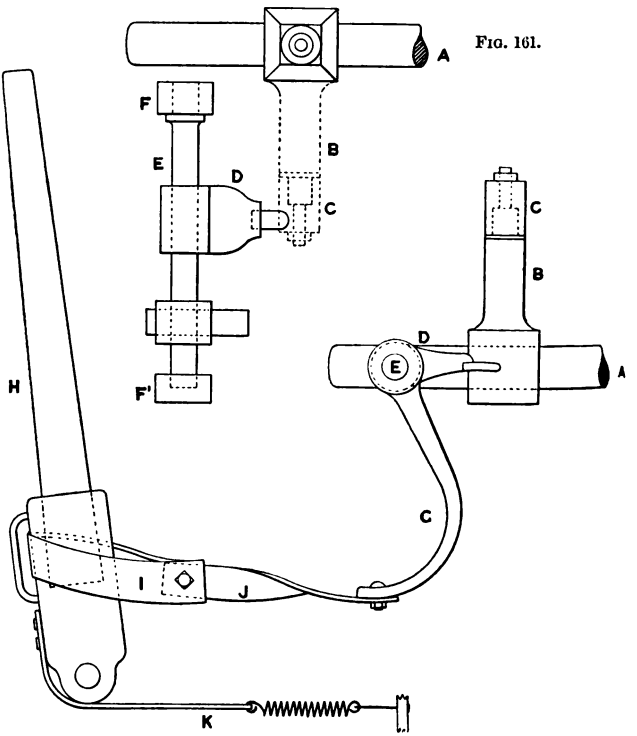

FIG. 161.

FIG. 162.

supported in brackets f, f', which are bolted to the end framing; it also carries a long curved arm g, having a connection made with picking arm h, by bending a strap i round the shoe of h, and bolting a second strap j to both i and g.

Digitized by Google

When bowl *c* pushes up the picking finger *d*, shaft *e* partly revolves, and in doing so arm *g* moves out, tightens straps *j*, *i*, pulls over picking arm *h*, and drives the shuttle.

Spring and strap *k* are employed as in the lever pick to pull back the arm after the delivery of each blow.

It will be observed that a loom furnished with this pick can be run in the opposite direction without disturbing a shuttle, the only effect produced being the slackening of straps *i*, *j*.

As used on pick and pick looms, the alterations are: first, a double striker *b* at each side of the loom instead of a single one; and secondly, a lateral motion, in addition to the rotary one previously mentioned, is given to the short shafts *e* by box tappets and lever connections, for the purpose of moving picking fingers *d* out of reach of strikers *b*. When once moved, the shafts retain their positions for two picks.

Before leaving the system of picking from the bottom shaft it may be desirable to mention a contrivance, which, although clumsy in construction and never looked upon with favour by the majority, is still used, and undoubtedly possesses good points. Its chief advantages consist in the gradual development of power, and in maintaining a fixed energy in the picker for all speeds of loom.

Two flat springs are bolted to the back framing at opposite sides of the loom; also at right angles to and above a cam upon the bottom shaft, they have their forward ends connected to the picking arms, and are in turn gradually elevated, but suddenly liberated at the proper moment to deliver a pick.

Digitized by Google

Picking from the Crank Shaft

The principle of picking from the crank shaft appears to have been introduced by Smith Brothers in 1834, with a view of utilising the superior speed and power of the fly wheel as compared with those of the bottom shaft, to obtain a more powerful pick and reduce the consumption of motive power.

If in two looms, otherwise equal, the circles described by two strikers—one moved by the bottom, and the other by the top shaft—have the same diameters, then a blow delivered by the latter will be four times as powerful as that delivered by the former, because the speed of one is twice that of the other, and $1^2 : 2^2 :: 1 : 4$. On the other hand, a pick delivered from the crank shaft must be comparatively sharp and harsh, owing to the short time during which striker and picking finger are in contact; also to the impossibility of paying much attention to shaping either striker or receiver.

On turning one of these looms slowly over and slightly pressing a picker against its box end, it becomes apparent that a picker is not under the control of the striker for more than $\frac{1}{3}$ the length of shuttle box. Whereas a similar experiment made with a cone pick shows the picker is pushed fully $\frac{2}{3}$ the length of shuttle box before contact ceases between picking tappet and cone.

One application of this principle, known as the "carpet pick," is shown in front and side elevations, Figs. 163 and 164: *a* is a portion of the crank shaft, *b* one of the fly wheels, *c* a striker bolted upon the outside of *b*. An inclined shaft *e* is placed outside the end framing and supported by footstep *f* and upper bearing *g*; it carries

Digitized by Google

short finger *d*, collar *h*, and curved arm *i*; the latter is connected to picking arm *k* by passing strap *j* round its shoe in the usual manner.

Shaft *e* is elevated diagonally by a box tappet *l*, keyed upon the bottom shaft, that causes lever *m* to oscillate on pin *n*, by means of bowl *o*, running on a stud in *m*, and in the groove of *l*; a fork is also formed at the extremity of *m*, which bears against collar *h*, and raises or leaves in

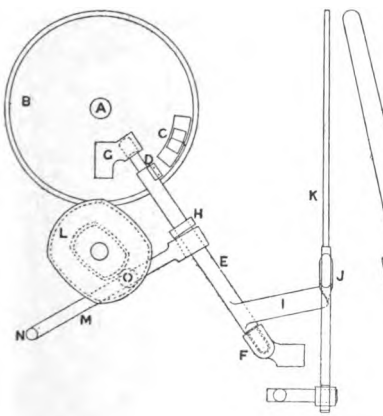

FIG. 163.

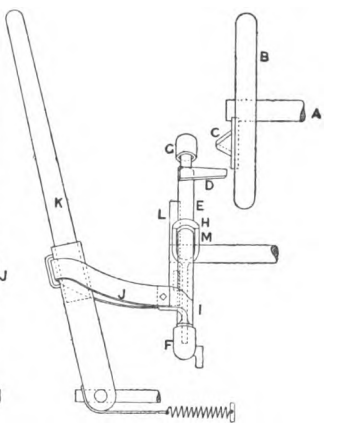

FIG. 164.

their normal positions lever *m* and shaft *e*, according to the shape of tappet *l*; if the former, finger *d* is higher than striker *c*, therefore picking arm *k* remains stationary; if the latter, *d* and *c* are brought together, and the pick is delivered.

By altering the form of tappet *l* and driving it at a suitable speed, two or more shuttles can be driven from one side of the loom in succession in this, and also in the two following modifications:—

Alterations made in the method of moving picking

Digitized by Google

finger *d* have formed the subject of several patents. Two only of these will be mentioned here—namely, Yates's, and the swivel pick; they are shown in Figs. 165 to 168, and in each case the same letter refers to a similar part in the carpet pick.

Yates (Figs. 165 and 166), instead of lifting *e* bodily, caused its upper end to be pushed away from the framing,

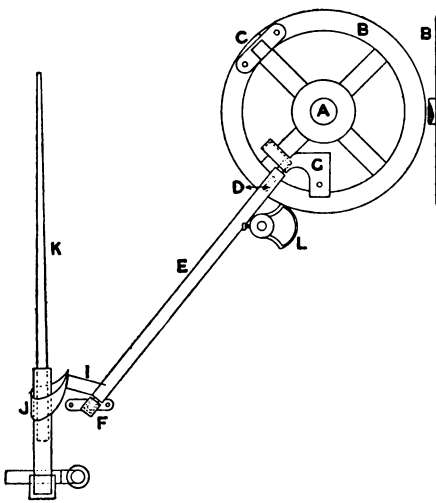

FIG. 165.

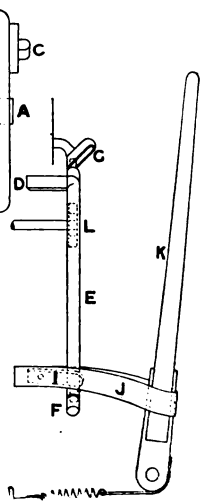

FIG. 166.

by making use of an inclined plane *g*, as an upper bearing for *e*; *g* is furnished with two flanges, between which the top end of *e* moves as in a groove and rests against the curved face of cam *l*; the latter is set-screwed upon a light shaft driven by wheel gearing from the crank shaft, and as it revolves, *e* is pushed up, and out, until *d* is finger beyond the reach of striker *c*.

In the swivel pick (Figs. 167 and 168) the upper bearing

Digitized by Google

g only permits of a rotary movement in *e*, consequently *e* is neither lifted as in the carpet, nor pushed out of the way as in Yates's pick.

Instead of which, finger *d* is hinged to *e*, and rests upon lever *p*. To miss a pick tappet *l* moves round, its full side elevates *p* and *d*, until *d* is above striker *c*.

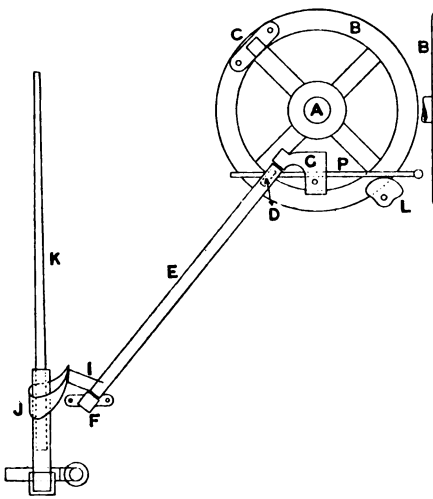

FIG. 167.

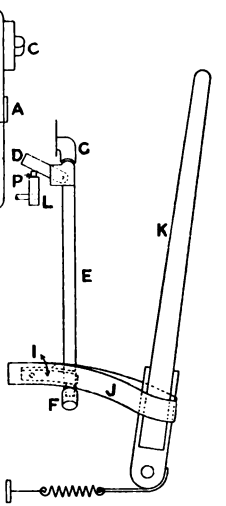

FIG. 168.

SCROLL PICKS

Two varieties of scroll motions have been introduced by Smith Brothers, the object of one being to lift striker *c* (Figs. 169 and 170) out of range of finger *d* by means of a stationary scroll *p*, bolted to the end framing and bored to admit crank shaft *a*. Scroll *p* consists of beads cast on one side of a disc in such a manner that grooves 1, 2 are formed to run into each other near the top at point *p'*, where a movable piece *q* is curved inward for the purpose

Digitized by Google

of turning half-moon r out of one groove and into the other, as clearly shown in detached figure (171).

Half-moon r travels in grooves 1, 2, by the rotation of fly wheel b, to which it is connected by a stud s passed

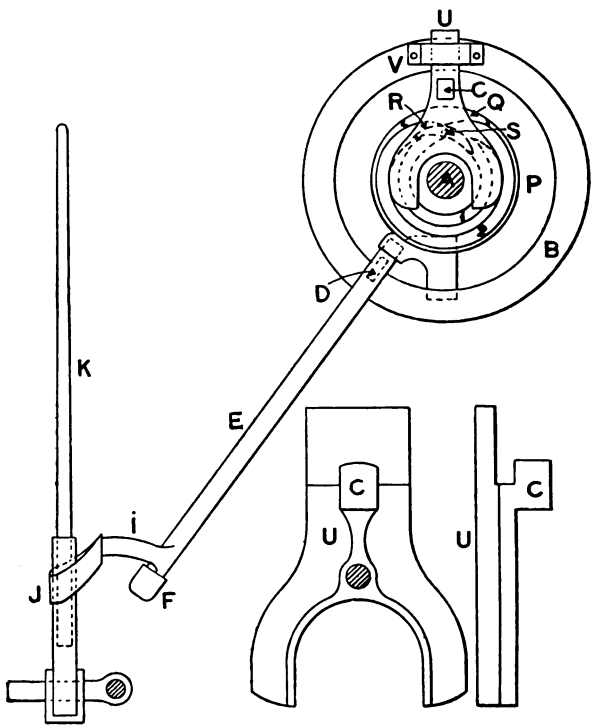

FIG. 169.

through a hole in striker bracket u, and a piece v, bolted to b, permits u to rotate with and slide upon the side of b, thus moving striker c in and out—in, when half-moon r is in groove 1, and out, when in groove 2.

Digitized by Google

In the latter position *c* is brought into contact with finger *d*, and the pick is delivered.

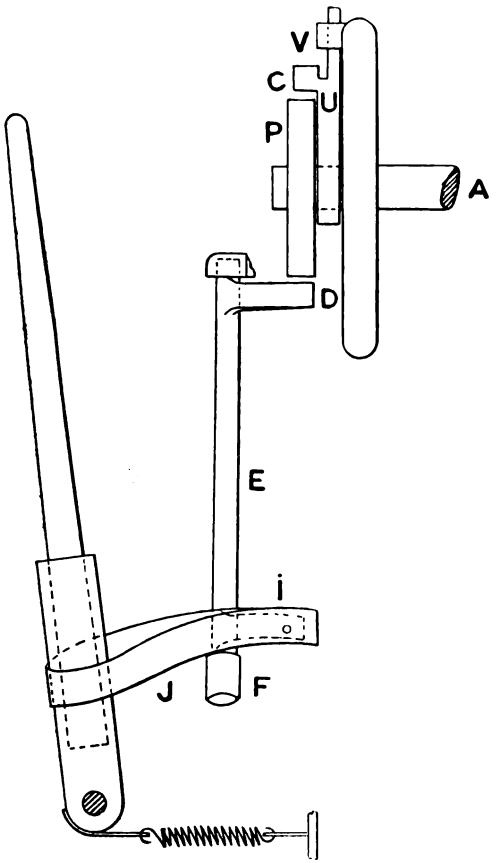

FIG. 170.

Figs. 172 and 173 show the parts of a revolving scroll; object being to provide a means of lifting a swivelling ger *d* above a striker *c*, secured to fly wheel *b*. A three-

Digitized by Google

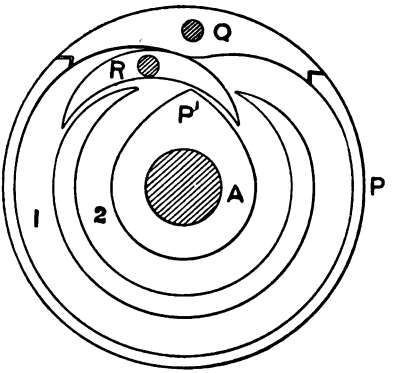

FIG. 171.

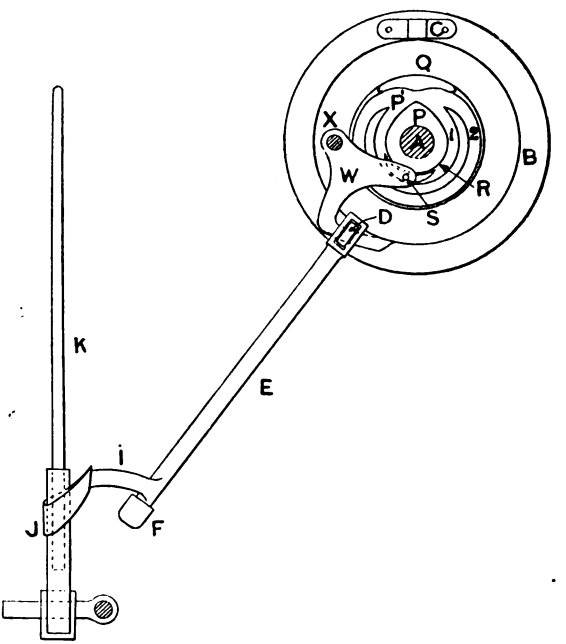

FIG. 172.

Digitized by Google

armed lever *w* is hinged to the framing at *x*; one arm

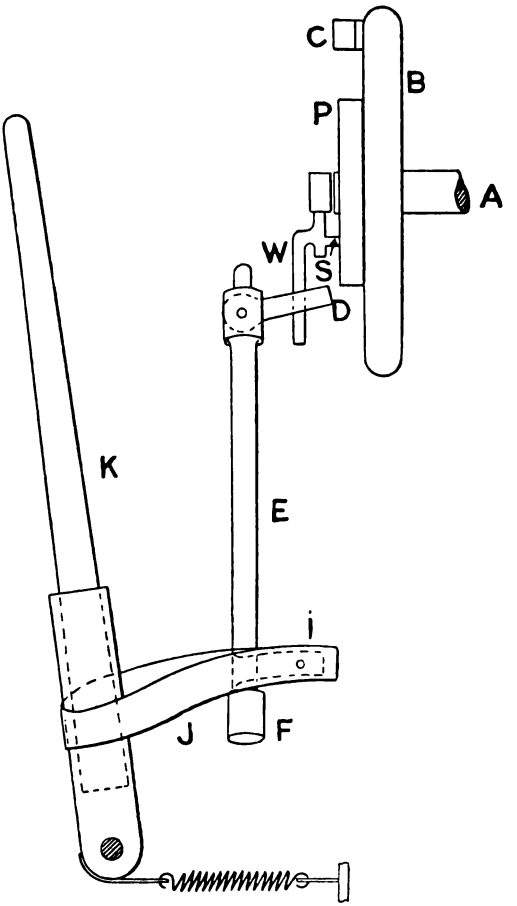

FIG. 173.

passes under and supports finger *d*, and the remaining arm carries stud *s*, which passes through the hole in half-moon

Digitized by Google

r. It is obvious that finger *d* will be raised when *r* is in groove 1, and dropped to pick when it is in groove 2.

If this contrivance possesses advantages over the swivel pick they are not very prominent. Half-moons are undoubtedly troublesome; they are frequently broken, and the general wear and tear is considerable.

Scrolls do not lend themselves to conversion into pick and pick motions.

OVER-PICKS

Several over-picks that were commonly met with a few years ago are fast becoming obsolete, and it may be affirmed of the system in general that, with one exception, it is not making headway.

Still that one exception probably embraces as many looms as are to be found using all other systems and varieties of picking motions taken together.

The cone pick is the one referred to; it forms part of most fast-running looms weaving light and medium fabrics; also, of some narrow and wide looms weaving heavy fabrics, and the mechanism has been modified to suit pick and pick looms. It consists of a vertical shaft *a* (Fig. 174), which, when placed outside the loom framing, gives the most satisfactory results, for in that position the picking tappet can be moved near its own point of support, and greater steadiness and solidity are thus obtained.

Shaft *a* is fitted to the loom framing by a cannon bearing near the top, and a footstep at the bottom; *a* merely serves as the fulcrum of a lever, of which one arm is a short stud *b*, passed through a slot in *a*, and fixed in position by screw and nut, to carry a loosely fitting, conical roller. The other arm *c* is of wood, and much longer than the former; it is attached to a ring on the top of shaft *a*,

Digitized by Google

that has radiating teeth on its upper surface for a ring with similar teeth on the under side to fit into, and a grooved cap is bolted fast upon picking arm *c* to hold all together. From the forward end of *c* a leather strap

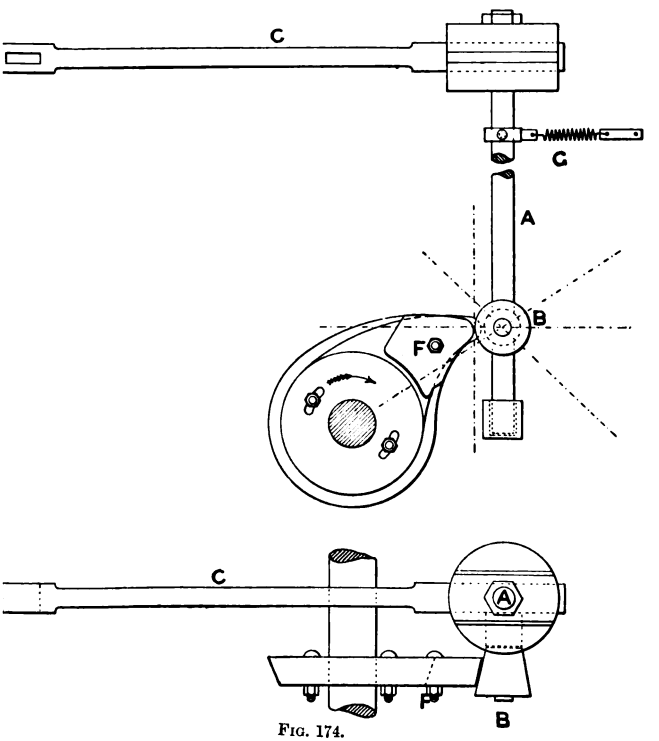

FIG. 174.

asses down to the picker, the latter being retained nmediately over the shuttle box centre by a spindle on hich it slides.

Motion passes through the cone-shaped antifriction roller pon stud *b* from a tappet nose *f*, keyed upon the bottom

Digitized by Google

shaft and inside the framing, that in striking *b* causes shaft *a* to turn partly round and move arm *c* and its picker towards the loom centre with sufficient velocity to drive a shuttle across. Tappet *f* is made in three parts, one a fixed disc, another is similarly shaped, but provided with a smooth, oblique surface, and concentric slots for bolts to pass through, the slots permit of a slight adjustment to vary the time of picking; a groove is also formed to take the third piece—namely, the picking nose.

Mechanism is fitted at the other side of a loom to correspond, except that picking tappets *f* are diametrically opposed to each other; when the nose of one points up, that of the other points down.

The conical roller on *b* is kept in constant contact with tappet *f;* and picking arm *c* and the picker are both moved back after the delivery of each pick by a spiral spring *g*, which is hooked upon a convenient part of the framing, and into a strap that is fastened by a set screw to a hoop upon *a*, immediately below a bead of the framing. Or, what is better still, for narrow looms, the straps from both shafts *a* are connected to opposite ends of a spiral *g*, situated below the warp, then as a pick is delivered at one side, the power required to distend *g* is utilised in pulling back the other arm *c*. A picking strap is always more or less slack when arm *c* is in a state of rest; it therefore follows that a picker is only partially moved back by *c*, so it requires the shuttle to impinge against it to complete its backward traverse.

The high speeds attained by many looms using this pick have rendered it necessary to bestow considerable attention upon its construction with a view to easy working, small consumption of power, and reduced wear and tear; but it is still defective, and must remain so, for the energy

Digitized by Google

is developed from a comparatively slow-running shaft in such an exceedingly short time that in ordinary looms the crank shaft only makes from $\frac{1}{4}$ to $\frac{3}{8}$ of a revolution, therefore at a speed of 200 picks a minute the shuttle must make its journey in from $\frac{1}{800}$ to $\frac{1}{533}$ part of a minute; but its velocity is not uniform; it is obtained from a tappet that pushes the cone stud, in equal units of time, through evenly accelerating spaces in the proportion of 1, 3, 5, 7, 9.

It is difficult to obtain with accuracy the amount of power required to drive a shuttle, owing to the variable conditions under which it performs its office, such as differences in friction, caused by large and small sheds, rough and smooth, close and open warp, strong and weak swells; but it can be approximately reached by using the following rules:—

First, work accumulated $\frac{w.v.^2}{2g}$, where w equals the weight of shuttle in pounds, v velocity in feet per second, and g 32·2.

For example, assume a loom to make 200 picks per minute; that a shuttle weighing 10 oz. is moved across a space of 5 feet in $\frac{3}{8}$ of a pick, the average speed of shuttle is $\frac{200 \times 8 \times 5}{60 \times 3} = 44{\cdot}4$ feet per second, and the energy developed is $\frac{10 \times 44{\cdot}4 \times 44{\cdot}4}{16 \times 2 \times 32{\cdot}2} = 19{\cdot}13$ foot lbs. per pick, or $\frac{19{\cdot}13 \times 60}{33{,}000} = \frac{1}{287}$ of a horse-power.

Now, what must be the force of a blow to produce this velocity of 44·4 feet per second? Let the mean force of blow in lbs. = 19·2, and the distance in feet through which it acts = 10″. Then $\frac{19{\cdot}2 \times 12}{10} = 23{\cdot}04$ lbs. per pick.

Digitized by Google

Or the question may be put thus—

A body at rest is acted on by a force which gives it a velocity of 44·4 feet per second in t seconds. The body weighs 10 oz. Find the magnitude of force. Let F equal force in lbs. Now, $v = ft \therefore f = \frac{v}{t}$; here v is taken as = 44·4.

To find the numerical value of t, assume a picking shaft to revolve 100 times per minute, and that it turns through an angle of $22\frac{1}{2}°$ to deliver each blow.

$\frac{360°}{22·5°} = \frac{1}{16}$ of $\frac{1}{100}$ part of a minute = $\frac{1}{16} \frac{1}{100} \frac{60}{1} = \frac{60}{1600} = \frac{3}{80}$ of a second = t.

Knowing t we have $f = \frac{44·4}{t}$, which gives a numerical value for f, the acceleration = $\frac{44·4 \times 80}{3} = 1184$.

Also $F = \frac{w}{g} f = \frac{10 \times 1184}{16 \times 32·2} = 23$ lbs. per pick when energy stored up in swells is neglected.

The length of picking arm c (Fig. 174) is to some extent determined by the width of loom, as the latter should not exceed c by more than $2\frac{1}{4}$ times (thus, on an average, a 20″ arm is used with a 45″ shuttle race). The length of picking arm fixes the position of upright shaft a, because, when reed and fabric are in contact, arm c, if drawn over the centre of picking spindle, should place the centres of picking strap (where it leaves the arm) and spindle in the same vertical plane.

In order to prevent a waste of power by giving the picking force an upward or a downward direction, it should be transmitted to the cone stud b at an angle as nearly approaching a right angle as possible consistent with the intensity required, for much of the harshness of these picks results from inattention to this matter.

Digitized by Google

It is clear that as the cone moves horizontally in the arc of a circle, its surface will constantly form different angles with the tappet shaft, and therefore to the picking tappet *f*; hence the latter is peculiarly bevelled to present a flat surface to the cone in every position. This bevel has rendered the mathematically correct construction of such tappets somewhat difficult. For many years it was a practice to fix a roughly shaped wooden model in position upon the tappet shaft and rotate both slowly to see if any sharp edges were presented to the cone, and if so, to alter its shape where necessary; after which the model was used as a pattern to cast from.

A picker may move 12″ or more at each stroke of a picking arm, but it is only driven through 8″ to 10″ by tappet *f*, the inertia completes its movement and is of no consequence to the shuttle, since the latter leaves the picker as soon as a decrease in speed takes place. A picking tappet may be said to have three functions. It must gradually tighten the picking strap to avoid giving a jerk to the shuttle; during this time arm *c*, and therefore stud *b*, move through an angle approaching 10°. This is followed by picking the shuttle across, and 22½° of accelerating movement in *c*, *d* is usually allowed for the purpose. Lastly, a further movement is given to *c*, *d*, in order to bring them gradually to a state of rest and thus reduce wear and tear—say 7½° in the decreasing ratio of 3, 2, 1.

Some writers affirm that a shuttle is intended to be in the middle of the slay when the driving cranks are on their back centres, but in practice this is not adhered to. Much depends upon the time of picking, and a pick is set to act from 15° before the bottom centres are reached to 10° after they are passed. If, for example, movement in arm *c* begins when the cranks are on their bottom centres

Digitized by Google

and the tappet angles equal those given above, the cranks will be $10° + 22\frac{1}{2}° + 7\frac{1}{2}° = 40° \times 2 = 80°$ above that point, or 10° below the back centres when the pick is completed, and the shuttle will be at or near the slay centre when the cranks are on their back centres.

Fig. 175 shows the construction of a picking tappet: *a* is the bottom shaft, *b* the picking tappet, *c* sectional view of the upright shaft, *d* cone, and *e* the horizontal plane in which *d* moves when nose *f* of tappet *b* is pressing upon it. Solid lines represent *d* in contact with the circular part of *b*, and dotted lines show it when nose *f* has moved it to the extremity of its traverse—say 40°. As the tappet disc is employed to tighten the picking strap, and as the time taken to accomplish this is unimportant, we will begin with the actual delivery of the pick. Divide the $22\frac{1}{2}°$ of movement in cone *d* into any number of parts—say 5, in the proportions of 1, 3, 5, 7, 9; then divide the remaining $7\frac{1}{2}°$ into 3 parts in the proportions of 3, 2, 1, and drop perpendiculars down to cut line *e*. Continue the latter inside tappet *b*, and describe a circle *g* from centre *a* to touch *e*. Draw a line radiating from *a* to pass through point 1 on *e*, make an angle of 30° and divide it into the same number of parts, but all equal, that the cone angle has been divided into—namely, 8. Through each point draw a line tangential to circle *g*, then with radia *a*, 1 to *a*, 9 describe arcs in rotation that cut the tangential lines. Let each point of intersection represent the centre of cone *d* as it is pushed outward by the tappet, and describe a circle round each having a diameter equal to that of cone *d*, where it touches line *h* on tappet *b*. To find the centre line of nose *f*, trace a line that touches the periphery of each circle. The inner and outer edges of *f* can be obtained by following a similar rule, but the diameter of cone *d* must be taken

Digitized by Google

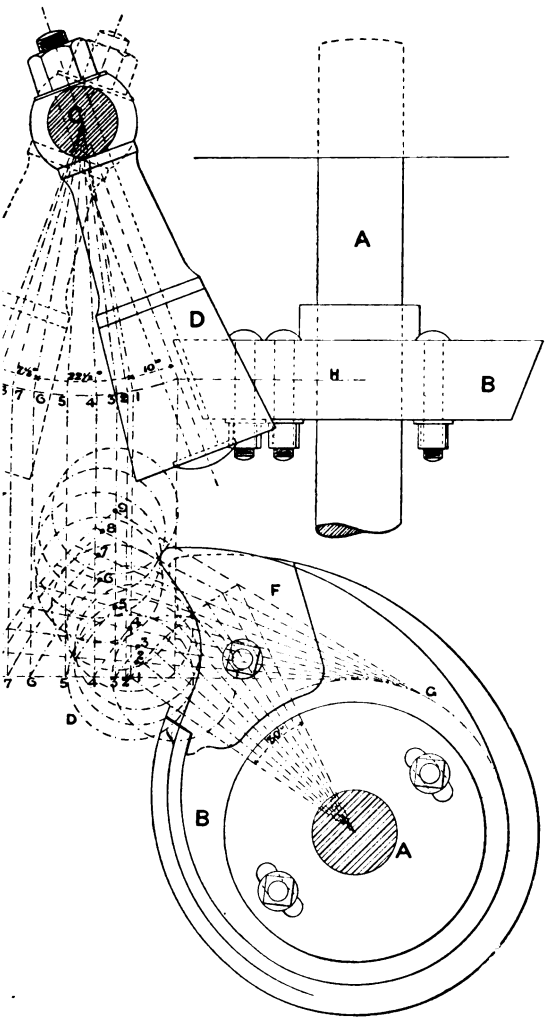

FIG. 175.

Digitized by Google

where it touches that portion of the tappet face to be drawn.

It will doubtless be observed that the line already traced is slightly inaccurate, owing to the use of one uniform diameter of circle to represent the cone instead of making them all differ in accordance with the part of cone in contact with tappet *b*; and again, that only one true circle will be given, when cone stud and tappet shaft are parallel; at all other places elliptical figures should be described. But the plan followed has been adopted to avoid undue complication, also because the inaccuracy is so exceedingly slight as to be of no practical account. Still, if it is thought desirable to construct a geometrically correct tappet, take the dimensions of cone *d* at the eight points shown, and construct an ellipse of the proper shape round each corresponding point where circles are shown.

An idea is prevalent amongst weavers and others that a shuttle is less liable to fly out if a fall is given to a race board, between the shuttle box and centre of reed space, of about $\frac{3}{32}''$ in a 45″ loom, and if the box spindle is higher, and farther from the box back at the inner than at the outer end. Some loom-makers also bow the reed to the extent of $\frac{3}{32}''$ on the above-named width of loom. The reason assigned is that a picker in travelling up an inclined plane elevates the rear end and depresses the forward end of a shuttle, and by so doing reduces any tendency in the latter to rise from the race board. Also that a sloping race board and a curved reed assist in further reducing the chances of flying out by permitting the shuttle to continue moving in a downward and backward direction until the centre is reached, and by that time much of its energy has been expended.

Advocates of this plan point to under-picked looms as

Digitized by Google

demonstrating its utility, for in slot picks the circular movement of the picking arm, when near the front of a box, has a tendency to press down its picker, together with the rear end of shuttle, and thus impart an upward direction to the front of a shuttle. As most of these looms are admittedly more liable to throw shuttles out than over-picks, a certain amount of plausibility is seen in the contention. Still the difference may be solely due to the more rapidly developed force in an under-pick, and until reliable experiments have been made, the question must remain in the domains of pure theory.

Positive Picking

The system of positive picking preceded that of negative picking by many years; it dates back to the days when attempts were first made to weave by automatic machinery, and has since been a favourite problem with many ingenious men of each succeeding generation. Nevertheless, little real advancement has been made for ordinary weaving.

The most extensively used motion of this class for other than small-ware looms was introduced by Lyall in 1876; it certainly contains many good points, and is less complicated than some negative picks, but whether through defective details or the staunch conservatism of Englishmen, it has met with little favour in this country; still, it is steadily making headway in the United States.

Lyall's mechanism is illustrated in Figs. 176 and 177: *a* is a disc crank turned by a side shaft and bevel wheels from the driving shaft; it gives motion by means of connecting rod *b* to a sliding block in a slotted vibrating arm *c*. Link *d* is pivoted to the framing and attached to the

Digitized by Google

sliding block; it causes the latter to move up and down the slot as crank *a* revolves. At its upper extremity *c* carries a pinion and also a band wheel *e*, the former engages with the teeth of a curved rack *f*, which rotates *e* as arm *c* oscillates. A shuttle band *g* is wound round

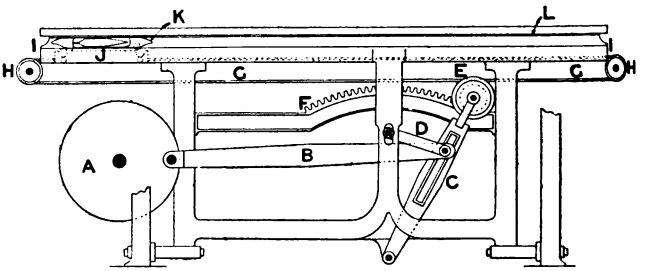

FIG. 176.

the periphery of *e*, whence it is led over sheaves *h*, at opposite ends of slay *i*, and finally connected to a carriage *j*, which moves upon four wheels on a bed in the slay bottom.

The wheels run in pairs on short horizontal pins fixed

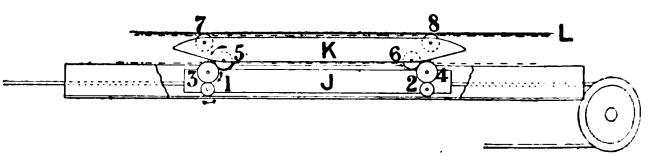

FIG. 177.

near the ends of carriage *j*, two of which are seen in Fig. 177, numbered 1, 2. Wheels 3, 4 project above and are journalled in *j*, so that they touch and are turned by contact with 1, 2. The shuttle *k* rests upon and is drawn along by carriage *j*. Shuttle wheels 5, 6 press against the insides of wheels 3, 4, and top wheels 7, 8 are only in

Digitized by Google

touch with and roll along the under surface of bevelled rail *l*. This arrangement holds the shuttle down in its place and flying out or getting off the carriage becomes impossible.

Assuming a right to left motion to be given to carriage and shuttle, the wheels revolve in the direction indicated by the arrows in Fig. 177, and all with the same surface velocity. Wheels 3, 4 lift the warp threads successively for wheels 5, 6 to roll over them, therefore a lateral movement of warp is precluded.

The shuttle moves at a constantly accelerating pace to the centre of fabric, whence its velocity is correspondingly diminished until a pause is reached with the opposite side. This arises from two causes: the first is due to crank *a* and the connecting pin of sliding block, and the second to the action of link *d*.

The shuttle begins to move when crank *a* is passing round its front or back centre, where for an instant the pin in the sliding block is in a state of rest; but immediately one of those centres is passed the pin begins to move slowly, and increases in speed until at the bottom or top centre its forward velocity almost equals that of crank pin, then a corresponding decrease takes place up to the next centre. In the second place, as arm *c* moves from either extremity of rack *f*, the block is pushed by link *d* nearer the fulcrum of arm *c*, and a greater velocity is developed by so doing.

PART XI

PICKERS

The picker is more severely taxed than any other part of a loom, especially when it receives the shuttle, for the

Digitized by Google

blow is given with a steel point and not distributed over an even surface. It has been estimated that a blow of an ordinary calico shuttle is equal to 1 lb. weight falling 3 feet; and as these looms commonly run at 200 picks per minute, it is not to be wondered at that the wear and tear of pickers form a serious item of expense in a weaving mill.

Pickers are made in a variety of forms and materials according to the requirements, or fancy, of the loom-maker and manufacturer.

The principal materials used are buffalo-hide, leather, wood, iron, and brass, but the first named is in by far the most general use. To be of real service they should be of good quality and of equal weight. A variation of $\frac{1}{5}$ of an ounce should not be exceeded for one make of loom and fabric.

Picker-making is a separate industry, and numerous processes are requisite before a finished article is obtained, which are briefly as follows:—Steeping the skins in water to soften them, cutting them into strips of dimensions to correspond with the size of picker to be made—ordinarily about $3\frac{1}{2}''$ by $1'{\cdot}0''$; they are then rounded, notched, punched, passed through rollers and shaved down to a uniform thickness, matched, or the weight equalised by adding narrow strips which are to be coiled inside in the following processes — namely, drilling, inserting a staple, riveting, roughly shaping, and pressing, by powerful machinery, into a usable shape; they are afterwards slotted, punched, and drilled, in which condition they are sent to the manufacturer, but are by no means ready for use. When new they contain moisture and are more or less pulpy.

They should be dried in a place where there is a constant current of moderately warm air for six weeks or

Digitized by Google

more, then steeped in good Gallipoli oil for at least one month, and are afterwards hung up and gradually dried for from six to eight weeks.

The times named are often considerably exceeded with good results. If pickers are not thoroughly dry before being steeped in oil, the oil will not allow the moisture to evaporate.

Strapping

Good strapping is of equal importance with good pickers; the best quality of leather, although necessitating a greater outlay at first, is cheapest in the end, for it does not stretch so much or break so soon as inferior qualities, and looms fitted with it are not stopped so frequently for repairs, consequently there is a double gain: first, in a greater output from a loom during the time a strap is in use; and secondly, from the superior lasting powers of a good, compared with a bad article.

Picking Bands

A picking arm has a ring groove made near its forward end into which the picking band fits, but the methods of attachment are very varied, and great difference of opinion exists as to what is the best length of band, and which is the most economical way of connecting it to arm and picker. Whilst some prefer bands of from 12″ to 14″ long by 1⅛″ to 1¼″ wide, others contend that bands from 23″ to 50″ long possess many advantages over shorter ones. Both single and double bands are used, some being directly connected to arm and picker, others are connected to a secondary or even to two secondary straps. Leather prepared in the usual manner is employed by some

Digitized by Google

manufacturers, but on the majority of looms, green or oak tanned bands are found.

The following are a few of the methods of applying bands to a cone pick on narrow looms :—One end of a tab 8″ to 9″ long by 1″ to 1¼″ wide is pushed through the side and top slots of a picker; both ends are brought together, and a slit of about 2″ is made near the ends for the picking band to pass through; the latter, 23″ to 24″ long, is bent round the ring groove of the arm, sewn across and down each side, punched with holes ½″ to ⅝″ apart, inserted into the slotted piece, and secured by pressing a wooden peg, or leather plug, through a pair of the holes made to facilitate length adjustment.

A method of using a double band that is often preferred to the foregoing requires a strap from 23″ to 27″ long, with a longitudinal incision made near its centre, and after fitting it in the ring groove, one end is drawn through the slit and pulled until both ends are level, then, as in the previous arrangement, both ends are passed through a short slotted tab on the picker and fastened with a peg. A piece of string tied round the band, immediately below the arm, holds it in position.

Short single bands require a double tab, 9″ long by 1⅜″ wide, to be turned round the arm, where it is sewn, and riveted with a wire staple to keep it in the groove; it is also slotted to receive the upper end of a band, 12″ to 13″ long, that is slit near one end, then passed through the front and top grooves in the picker, after which the other end is threaded through the slit, drawn tight, and made fast by a peg to the tab on the arm.

Single bands, 25″ to 50″ long, have one hole punched near the lower end, which goes in at the front and comes out at the picker top; a piece of leather pushed

Digitized by Google

into the hole prevents the band slipping out when working. The free end is provided with an indefinite number of holes approximately $\frac{3}{4}''$ apart; it is taken up to the arm and twisted round spirally until all is wound on, then a wire pin, driven into the arm, goes through one of the holes to retain it in position. A wire staple or a strip of leather screwed to the arm bridges the gap of the ring groove and holds the band in its place. Instead of a leather plug to connect band and picker, it is by no means unusual to find bands slit near the picker, and the other end passed through the slit to couple them. Those in the habit of using long bands contend that the consumption is smaller than where short ones are employed, for the reason that bands generally break near a picker, and in the case of a long one the damaged part can be cut away, a fresh hole punched, a portion of the band unwound from the arm and again secured at both ends as before.

The Check Strap

is a simple and effective contrivance for assisting swells in preventing shuttles rebounding. It was invented by Crook and Eccles in 1845, and is now in a slightly modified form attached to quick-running looms, with either fast or loose reeds.

It is merely a leather strap *a* (Fig. 178), about 1″ wide and of equal length with the loom. Four guides *b* are screwed to the slay front to support and permit of a sliding motion in *a*, which at its centre has a thick piece of leather *c*, $\frac{1}{2}''$ long by 1″ deep, nailed upon it between the two centre guides, that are about 4″ apart, to allow $3\frac{1}{2}''$ of traverse. Each end of *a* is secured to a short tab *d*, 6″ long and $1\frac{1}{2}''$ wide; both tabs have a hole punched

Digitized by Google

near one end to allow the picking spindle to pass freely through, and a slot is made at the other end wide enough to receive strap *a*. When in position *a* is fastened by a piece of wire, or instead of slotting the tabs, a buckle may be sewn upon each, for either provides a ready means of adjustment. Tabs are placed behind pickers, and all should be put upon the spindles at the same time, but strap *a* is not adjusted until the loom is ready for work; it is then usual to place the cranks upon the bottom centres and tighten *a* until the picker is about 1″ from a box end. Two pieces of leather *e* called guards, 1½″ broad by 5″ long, are punched at both ends, then one end is pushed on a

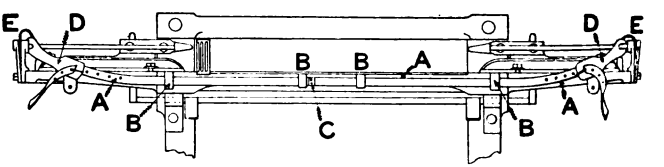

FIG. 178.

spindle in front of a tab, and the other goes behind a spindle plate. If *e* are properly adjusted piece *c* can be removed and the check strap will work satisfactorily. In no case must a picker be allowed to strike a box end, or shuttles will rebound, cops be knocked off, bobbin or shuttle pin broken, and it will be apparent that the pick is too strong, the swells too weak, or the check strap is imperfectly adjusted.

BUFFERS

Buffers are required to keep a picker from striking a spindle stud; they consist of three or four thicknesses of leather, 6″ long by 1″ wide, doubled to bring all the ends together, and then riveted with a wire staple, but loops are

Digitized by Google

left large enough for the spindles to pass through. A slot is provided near their extremities, each to receive a strap, one end of which is bolted to the slay front, the other is pushed into a buffer slot and fastened by a piece of straight wire.

Other buffers consist of a strap doubled at one extremity, and punched to receive the spindle, the free end is screwed to the slay front.

Others, again, are formed of a closely coiled strap, with a hole drilled through all the coils for the spindle to enter, after which the straight end is made secure upon the slay.

PART XII

SWIVEL-WEAVING

Swivel-weaving stands in the same relation to picking that lappets stand to shedding. Both are intended to produce small continuous stripe figures, with material differing from that composing other parts of the fabric, or small detached figures may be diapered over the surface of the piece. Both give somewhat the appearance of embroidery, and afford a means of preventing waste, for the reason that figuring material is only used where figures are to be made.

If the two systems are compared as to beauty of effect, variety of detail, and general excellence of workmanship, swivels are vastly superior to lappets; but when compared for cost of production, the latter is found to be more economical; for swivel looms are costly and elaborate; they are run at a slow speed, and each pick of swivel weft is driven above a pick of ground weft; hence the length of

Digitized by Google

fabric produced is determined solely by the number of ground picks inserted.

Swivels have been made in power-looms for upwards of twenty years, but they are still, to a large extent, produced on hand-looms. Owing to the large addition to the number of shuttles in use, the increase of mechanism necessary to manipulate them, and the absence of detectors to stop a loom if figuring threads break, the weaver's work is considerably increased, and frequent stoppages of the loom are entailed.

Swivel-weaving consists in adding ribbon shuttles to an ordinary loom in such a manner that they can be held out of the way, dropped upon the race board, and moved under lifted warp at pleasure, but there must always be a space between spot and spot at least equal to the length of a shuttle which varies from 1″ to 5″. There is, however, an attachment on most looms for moving all the shuttles laterally after the first line of spots has been completed, so they shall occupy positions exactly midway between their former situations, then the second line of spots prevents unsightly rows, and gives an equal distribution of figure. Or they may be thus moved to form twill and other arrangements.

In power-looms, swivel shuttles are fitted in a movable carrying frame attached to the front of a slay, which is raised and lowered by the indirect action of a Jacquard, operating through a cam, levers, rods, and spiral springs. The frame can thus remain stationary for any length of time by simply leaving cards blank where they face the needles that govern it, and by suitably perforating cards the frame can be lowered in unison with the formation of a shed. The Jacquard is also employed to throw the ordinary picking motion out of action whenever swivels are to be moved, and to cause long racks to drive the small shuttles.

Digitized by Google

All cams used should be driven by a clutch, or be capable of sliding on a key-way, so that they can be put in and out of gear by the shedding motion, for many fabrics have their spots arranged at such distances apart that certain portions only contain ground weft; hence, during the weaving of the last-named parts, the frame is lifted, and all its connections are inoperative.

A shuttle is hollowed out to take a weft bobbin, which is loosely fitted upon a movable wire spindle, one end of the latter is pushed into a hole inside the shuttle, the other end is bent at right angles, and pressed tightly into a slot in the opposite edge. A spring presser held against the bobbin centre prevents the weft unwinding too freely; it is assisted in maintaining an even tension by two glass rings situated on opposite sides of the shuttle eye, each being secured to a thin spiral spring fixed in the shuttle; the springs have a tendency to take up slack weft, and so prevent loops forming round the edges of the figures. After threading weft through both rings, it is led through an eye at the shuttle centre.

A more perfect tension results from the employment of a spindle, in which a hole is drilled to receive one end of a thin spiral that has a collar fitted to its opposite end. A sleeve, with four protruding flat springs, goes over the spiral, and fits tightly upon the collar. The weft bobbin is, in turn, lightly pressed by the flat springs. The spiral, however, gives this method its great advantage, for as weft is drawn away there is a tendency to uncoil the spring, but immediately weft becomes slack, the spring exerts sufficient force to wind back four to five inches.

Shuttles are sometimes supported in their frame horizontally, sometimes vertically. If they are horizontal, a single row is employed, and portions of the frame between

Digitized by Google

the shuttles are cut away to leave room for lifted warp when the rack is on the race board. The back of each shuttle is grooved throughout its entire length, and a lip is formed to fit into a similarly shaped holder near the bottom of the frame. A rack, with metal or leather teeth, equal in length to and secured upon the top of every shuttle, gears with two pinions. Motion is given to all pinions by a vibrating rack, long enough to reach across the reed space. If the long rack moves to the right, all shuttles will be driven into holders immediately on the left, and by reversing the direction of motion they will be restored to their former positions. It is therefore obvious that holders must exceed shuttles in number by one.

A rack is usually governed by the Jacquard through a cam, a series of links, and an upright shaft, and means are provided for putting the rack out of action whenever it becomes necessary to stop swivelling. Figuring shuttles occasionally move simultaneously with the ground one. In such cases it becomes necessary to open two sheds—the lower one for ground weft, and the upper one for figuring material; but it is questionable whether the gain is a real or an imaginary one, for the great strain put upon a few threads lifted for figure will undoubtedly cause numerous breakages; if, on the other hand, the inventor's aim could be realised, the production of a loom, with a single line of shuttles, would be doubled (see Howarth and Pearson's Jacquard, Fig. 92).

When shuttles are supported vertically, four or five may be placed one behind the other, and, as a consequence, four or five colours may be employed in the development of each figure. All shuttles are suspended from frames, in which a separate groove is cut to receive every line; the latter are also grooved and flanged, and racks are secured

Digitized by Google

to their tops which engage with pairs of pinions pivoted in a fixed holding frame. Shuttles placed in this manner must become shallower as they recede from the reed in proportion to the slope of the warp, but they are somewhat difficult to adjust and refill. In order to render the last-named processes easy of attainment, each holder is hinged to the bottom edge of a fixed frame, therefore any set of shuttles can be instantly turned up, and thus brought into a handy position for manipulation.

Circles

Circles are used as substitutes for swivel shuttles in hand and power looms; they can be successfully employed where not more than two lines are required, but beyond that they are less useful. Compared with the older method, a greater number can be placed in a given width; still this advantage is purchased at the price of increased parts.

A circle frame is raised and lowered in a similar manner to a swivel frame. The chief differences are to be found in the circles which consist of metal plates shaped to resemble horse-shoes, each is secured by, and turns inside, two flanged plates, but, in a state of rest, all points are towards the warp.

Every plate carries on its face a weft bobbin, and at the rear a series of pins project far enough to gear with the teeth of a long rack capable of moving laterally. When a frame is lowered, the openings in the shoes permit spotting warp to rise, then movement is given to the rack, and all the circles make a complete revolution. In doing which, the weft bobbins pass under the warp at one side and emerge at the other. On the following figuring pick rotation is reversed.

Digitized by Google

PART XIII

WARP-PROTECTORS, OR FAST AND LOOSE REED MOTIONS

If, from any cause whatever, a shuttle fails to reach its proper box, the loom must either be instantly stopped by a fast reed motion, or provision made whereby a shuttle may remain amongst the warp, and the cranks revolve without doing damage. In this case, a loose reed motion is used.

All looms are provided with curved levers called swells, which, in fast reed motions, serve the twofold purpose of protecting warp from being broken when a shuttle is in the shed, and also of stopping a shuttle from rebounding after entering a box.

Swells *a* (Figs. 179 and 180) are generally made of iron, but many wooden ones are still to be met with, although the latter rapidly wear away at the shoulder, and it becomes necessary to replace them with new ones, or to cut away portions from each end in order to again bring them back to their required shape. This long formed one of the chief defects of wooden swells, but a simple and satisfactory method of preventing wear, and also of increasing or diminishing at will the obliquity of their surfaces, has been recently introduced by Messrs. Collier, Evans, and Riley of Farnworth.

The invention is shown in Fig. 180, where swell front *a* has a coating *b* of thin steel firmly secured upon it at *c*, and at *d* a screw is passed through a slot in *b* to hold the rear end in position. At *e* a hole is bored through the wood to receive a set screw *f*, that is retained in position

Digitized by Google

by a plate *g* affixed on the swell back and a lock-nut. The end of *f* projects beyond the wood and carries a second nut *h* for the purpose of impinging against the

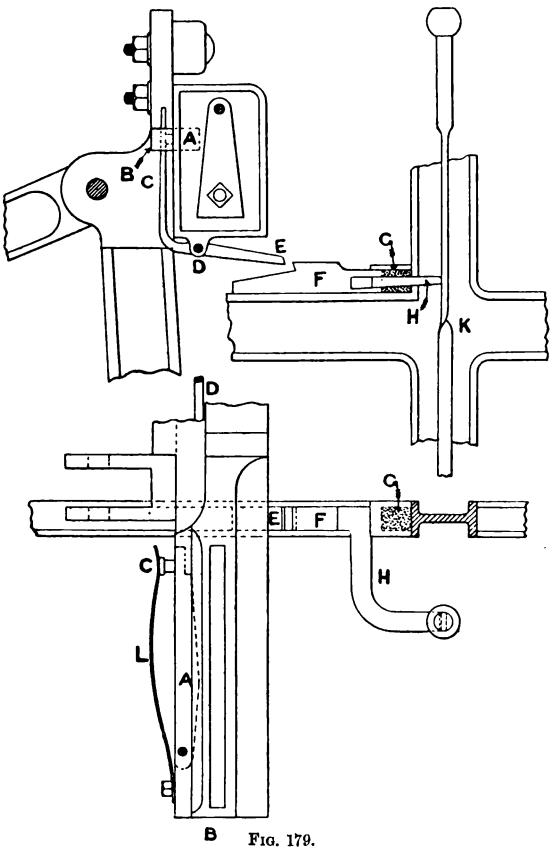

FIG. 179.

inside of plate *b*, hence by screwing or unscrewing *f* the size of shoulder can be regulated; *b* also provides an elastic cushion for the shuttle to strike against. A

Digitized by Google

swell is hinged near the outer end of a shuttle box (except in a few looms where the pin is reversed), and its curved face protrudes inside box *b* (Fig. 179), and is pushed forward by a lever *c* resting behind it. Below *b* an oscillating rod *d* works in bearings, preferably fixed upon the swords; but, in the sketch, is shown attached to the slay bottom; it extends across the loom, and has levers *c* set-screwed upon, and flattened blades *e* welded to it. In front of, and directly in the path of *e*, a buffer *f*, known as a frog, is provided with a shoulder that is struck by blades *e* whenever a shuttle is absent from a box; *f* rests upon a portion of the framing, and its forward end presses against a rubber cushion *g*, a spiral, or a flat spring, and

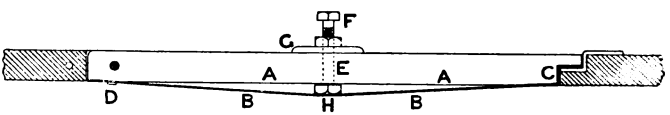

FIG. 180.

in many looms frog *f* is connected to a brake on the fly wheel by an arm, in such a manner that a forward movement of *f* puts a drag upon the wheel, and assists to stop the loom speedily.

Blades *e* and frogs *f* are shaped to dovetail into each other when in contact—this is done to avoid slipping; and in that position, without other aid, they could bring the loom to a sudden stand, but breakages would be of constant occurrence, through the violent shocks of impact between *e* and *f* when the driving strap was exerting its full force to carry the slay forward. This defect is overcome by attaching an arm *h* to one of the frogs *f*, and shaping it to place its forward end immediately behind setting-on handle *k* when the loom is in motion; so, as the frog recedes from the blow of blade *e*, arm *h* partakes

Digitized by Google

of a similar movement, pushes handle *k* out of its notch, and the driving strap is thrown upon the loose pulley.

Either a flat spring *l* presses against finger *c* to assist in holding blade *e* in striking position, or the top of a spiral spring hooked upon the under side of *e* has its lower end fastened to a bracket bolted upon the slay.

So long as a shuttle is moving properly the loom continues in motion; for, as the former enters a box, it pushes back swell *a* and finger *c*, the latter causes rod *d* to oscillate and carry the front of *e* clear of *f*, but if a shuttle does not reach a box there is nothing to push back swell *a*, consequently the loom is stopped.

Beyond the primary condition that all parts must be true and free to move as intended, the points requiring most attention are: length, position, and pull upon the blades, together with the size and shape of swells. The blades, or blade,—for some looms have a stop motion at one end only, although two are better able to keep the slay from twisting,—should be long enough to leave a shuttle in the warp without fear of breaking threads as the slay moves forward to beat up; but if the blades are too long, there is a tendency for them to strike the frogs before a shuttle has time to lift them clear away; they ought to rise about $\frac{1}{4}''$ above the frogs when a shuttle is full in its box.

As previously stated, a rod should not be fixed to the slay bottom, but upon the swords, and its best position is found if blades are horizontal when in contact with frogs, for then the rod centre sustains the shock, and there is no tendency to twist; but if a rod centre is above the frogs, its tendency to rotate is proportionate to its elevation, and part of the energy of impact tends to bend or break finger *c*.

Digitized by Google

If springs upon the blades are too strong, a shuttle will require driving with increased force, and worn shuttles and swells result, together with a waste of motive power.

Worn swells, narrow shuttles, and wide boxes are troublesome; each and all cause a loom to knock off when it should continue in motion, just as worn blades, frogs, and weak springs allow a loom to run when it should be stationary.

At the best a fast reed motion is harsh in action and puts great strain upon many parts of a loom, but the rigidity of the reed especially recommends it for the production of heavy fabrics.

Loose Reed Looms

A contrivance, patented by Hornby and Kenworthy in 1834, greatly improved by Bullough in 1842, and also by many later inventors, remedied most of the evils attending the use of the stop rod, and is extensively used on light and medium looms. By its aid a loom can be stopped if a shuttle gets trapped in the warp by simply pushing the setting-on handle out of its notch and leaving the loom running until the driving strap is entirely upon the loose pulley.

The parts of a loose reed motion are shown in Fig. 181, where *a* is the reed, with its upper rib pushed into a groove in slay cap *b*, the groove forming a sort of pivot for *a* to swing upon, *c* is a strip of wood, a bar of flat or of angle iron extending across the loom and pressed against the bottom rib of *a* by the action of a series of arms, one of which is marked *d*; they support *c*, and are fixed upon an oscillating rod *e*, occupying a similar position and corresponding with the stop rod of a fast reed loom. An additional arm with an adjusting screw is also secured to

Digitized by Google

rod *e*, and its screw presses against the rear of a slay sword to regulate the pressure upon reed *a*. Two curved levers *f* are keyed upon *e* equidistant from opposite ends of the slay; these, as the slay moves forward, have their outer ends carried against the upper or lower faces of

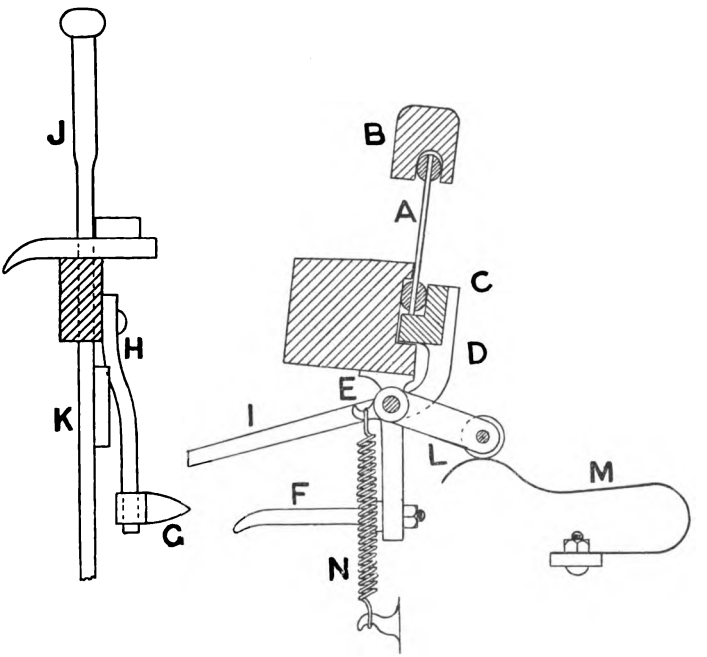

FIG. 181.

wedge-shaped pieces *g* called heaters or frogs; the latter are held rigidly by brackets *h* bolted to the framing. An arm *i* is also keyed upon rod *e* exactly opposite the working point of starting handle *j*; but when reed *a* is in its normal position the point of *i* must be below the corrugated surface of a buffer *k* upon *j*. Another arm *l* is fixed

Digitized by Google

upon rod *e* outside the end framing, which carries an anti-friction roller at its extremity, so that, as the slay falls back, *l* is taken into contact with a bent spring *m* bolted to the framing. The function of parts *l*, *m* is to hold reed *a* steady as a shuttle moves across, and spiral springs *n* perform the same office when *l*, *m* are apart; *n* is stretched upon two hooks, one on rod *e* and the other on the slay sword.

The reed is held firm to beat up, but its lower portion must move back freely if a shuttle is trapped.

Fingers *f* should be underneath, and from $\frac{3}{8}''$ to $\frac{1}{2}''$ past the point of frogs *g* when reed and fabric are in contact; at the same time bar *c* should bear tightly upon reed *a*, to prevent any vibration and give a smart blow to the weft.

If the cranks are on the top centres, only the power of springs *n* keeps the reed from falling back; there should then be a space of about 2″ between fingers *f* and frogs *g*, so, in case a shuttle stops in the shed, the warp resistance will be sufficient to open springs *n*, force back reed *a* and bars *d*, thus causing rod *e* to oscillate, fingers *f* to be carried to the upper slope of frog *g*, and arm *i* to abut against buffer *k*.

It is thus seen that fingers and frogs combine to remove the weight of bar *c* and the pull of springs *n* from the reed at the instant that arm *i* pushes the setting-on handle out of its notch, and the loom is brought to a stand without violent concussion. But a loose reed is not suitable to the production of heavy fabrics, owing to the difficulties experienced in making the reed sufficiently firm to beat up, and sensitive enough to throw out the reed before a shuttle can damage the warp.

Swells in a loose reed motion prevent a shuttle from rebounding out of its box, and to some extent assist in

Digitized by Google

guiding it; but if they are defective, cops are liable to be knocked off, and shuttles, pickers, and bands rapidly wear out.

Many of them are similar to that described as forming part of a fast reed motion, but the fulcrum pin has a tend-

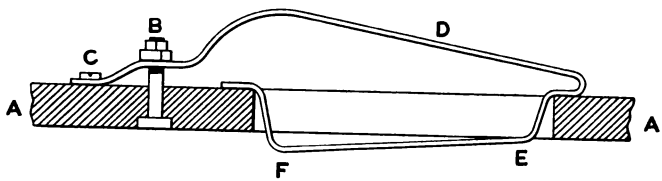

FIG. 182.

ency to act as a wedge and leave the greater part of a swell out of contact with the shuttle when in a box.

Messrs. Harker and Grayson have patented a double spring swell which controls the shuttle better than most, for it constantly changes its position with relation to the shuttle, and yet, as the latter is driven home, the entire length of swell acts upon it.

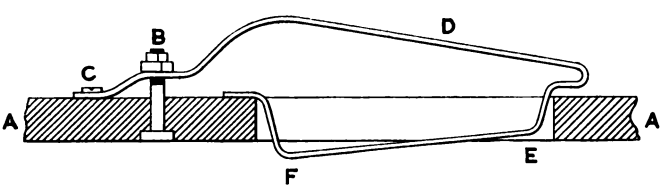

FIG. 183.

Figs. 182 and 183 are plan views of this swell: *a*, *a* is the back board, *b*, *c* bolt and screw respectively, used for fixing spring *d* in position; at *e* the spring projects slightly in front of *a*, but at *f* it stands about $\frac{5}{16}''$ beyond.

When a shuttle is received or released it comes into contact with the spring at *e*, and *d* gives way; but when it

Digitized by Google

is more than half-way in its box, the spring gives way at *f* and acts in conjunction with *d*.

PART XIV

SHUTTLE-GUARDS

Some simple trustworthy appliance that will prevent shuttles from flying out without entailing more labour upon the weaver is still a desideratum, notwithstanding the fact that a large variety of apparatus is now before the manufacturing public professedly for attaining the objects named above.

Few guards will absolutely prevent a shuttle from flying out, but most of them prevent flying up; and as the latter evil is more to be feared than the former, it must be granted that to this extent they are serviceable; and if more of them were constructed to withstand the severe shocks occasioned by beating up, it is probable the number in use would be largely increased, but so long as light flimsy brackets, and screws driven into the slay cap are common, the people most concerned in keeping them in order will use every endeavour to prevent their application, for after a few months', or even weeks' work, the brackets break or become loose and require constant attention. A guard to be really serviceable should be secured to the slay by bolts that pass entirely through the cap, and where parts move in bearings the latter should be broad and firm.

Guards are of three classes — namely, rigid, semi-automatic, and automatic. For heavy work the first-named appear to meet with most favour. They consist of at least two metal plates, 4″ to 5″ long by 2″ broad, both of which

Digitized by Google

are bolted through cap and sword; these plates or brackets support opposite ends of a fixed rod $\frac{7}{16}$″ to $\frac{1}{2}$″ in diameter that extends over the shuttle's course at a height of from $2\frac{1}{2}$″ to 3″ above the race board, and from 2″ to $2\frac{1}{4}$″ in front of the reed. If the loom is a wide one, intermediate brackets are bolted upon the cap to serve as stays. Such a guard is firm and simple, but it seriously interferes with the weaver's freedom to see and repair broken warp. It cannot prevent a shuttle from leaving the reed and flying out at the edges of a fabric, for there is no guide of any kind at these points, unless an additional iron plate is bolted on the slay front near the entrance to each shuttle box. Such plates are made to bend inwards and over to the cap; they are also spoon-shaped, to ensure catching a flying shuttle, but what a weaver gains in safety he loses in having his labour increased when changing shuttles.

Semi-automatic guards are numerous, and varied as to detail. Hall & Sons make use of two brackets which they attach to slay cap and swords, as previously described, but they are used as bearings for a swivelling guard bar, made of $\frac{7}{16}$″ round iron, to move in. When the bar is in working position it is locked by forcing it against fixed stops, and to the rear of two tapering pins situated in chambered recesses in the brackets; a spiral spring is pressed into each recess, and the shank of a tapered pin goes inside the spring, through a hole at the back of the chamber, and is secured by a nut. Each pin will therefore slide back when sufficient pressure is brought to bear upon it, and this is accomplished by grasping the guard bar and drawing it forward before entering warp into the reed. When not in working position the bar rests upon the slay cap, and does not in any way interfere with the weaver; but before restarting the loom he must turn it down again. The only

Digitized by Google

increase in labour consists in moving the bar up and down by hand, beyond this the contrivance is simple and firm.

Marriott's Guard

The guard patented by Marriott can be more truly described as semi-automatic than the preceding, for it will

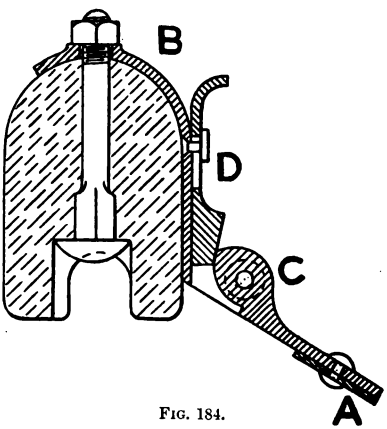

Fig. 184.

turn down and lock itself in position when a loom is set in motion. The guard blade *a* (Fig. 184) is approximately 1″ broad by $\frac{1}{8}$″ thick; it is $2\frac{1}{2}$″ above the shuttle race and 3″ from reed to front of guard. Two brackets *b* are secured to the slay cap by bolts that enter at the reed groove and pass out at the top of the cap. Blade *a* is fixed to *b* by hinges *c*; that nearest to the starting handle is made with a cam-shaped projection, behind which a sliding wedge-shaped piece *d* drops to lock blade *a*. Wedge *d* is slotted and fastened to bracket *b* by a bolt. When the loom is stopped to repair warp, *d* is lifted by the forefinger, and the guard plate is turned up to the cap by the thumb. On

Digitized by Google

re-starting the loom, *a* falls down as the reed strikes the cloth and wedge *d* locks it in position.

This is also a simple inexpensive motion, and is not liable to become deranged through vibration.

Hamblet & Clifton

Hamblet & Clifton introduced a guard in which two brackets screwed to the slay cap form bearings for a light shaft; one has a clutch face, and is chambered out to admit a helical spring; one end of the latter is secured to the bearing, and the other to a collar on the shaft. The collar has also a clutch face, and is pulled against the similarly shaped face of the chambered bracket by the spring. The shaft carries three arms curved downwards to support two parallel rods. In case threads are to be drawn in the rods are turned up by hand, and the inclined surfaces of bracket and collar open the spring. Vibration caused by beating up is sufficient to ensure the guard assuming its proper position when the loom is re-started.

Automatic Guards

The third class of shuttle guards is also a large one, and must in all cases contain parts that automatically move out of the way when a loom is stopped, and are automatically restored to position as soon as a loom is re-started.

The following has not been selected because of its superior merit as compared with others belonging to the same class, but simply as illustrating the general lines on which inventors have worked. It was brought before the notice of manufacturers in 1893 by Farrell, and consists of

Digitized by Google

a bowl *a* (Figs. 185 and 186) that turns freely upon a stud in the starting handle. A curved lever *b* rests upon *a* in such

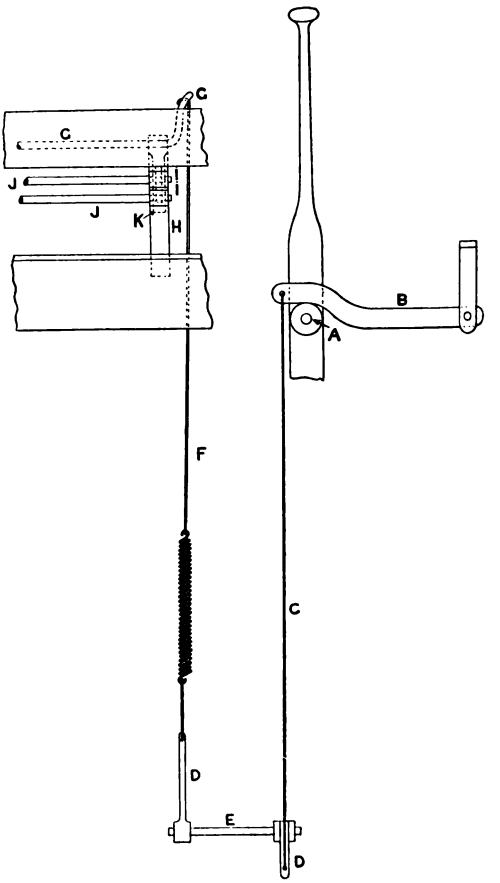

FIG. 185.

a manner that as the handle is pushed outward *b* is elevated A stout wire *c* connects *b* with the outer arm of a lever *d*.

Digitized by Google

retained in bearing *e*, and situated on the bottom rail of the end framing. A similar wire *f* connects the inner arm of *d* with the cranked end of a rod *g* that extends entirely across but behind the cap; *g* is supported near each end by brackets *h* screwed upon the slay back, and at intervals between those points by bearings also attached to the cap. At two places—namely, outside the reed ends and inside the swords—four holders *i* pass through slots in *h* and protrude over the shuttle race, two on either side of the loom, but one above and resting upon the other. A hole is drilled entirely through the headpiece of each holder for the purpose of supporting two parallel guard rods *j*. The holders are connected in pairs by pins to brackets *k* set-screwed upon rod *g*.

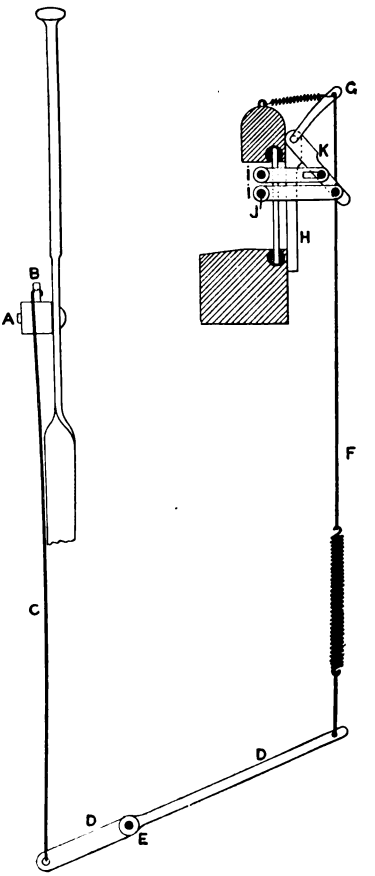

FIG. 186.

When the loom is put in motion bowl *a* acts through levers *b*, *d*, and connections *c*, *f*, to cause rod *g* to oscillate, and thrust forward holders *i* and rods *j* over

Digitized by Google

the shuttle's path; but whilst the upper rod moves out $1\frac{1}{4}''$ from the reed, the lower rod attains a position fully an inch in advance of its fellow.

This effect is produced by making slots of $\frac{7}{8}''$ in the upper pair of holders and simply drilling holes about $2\frac{1}{2}''$ behind the guard rod of the lower pair; then passing two pins in each bracket *k* through holders *i*, one entering the slot of the top piece, and the other the hole of the bottom piece.

Immediately a loom stops the pins draw back holders and rods until the latter rest against the upper part of the reed face, in which position they offer little obstruction when warp is being drawn in; but the motion has the defect, common in shuttle-guards, of lacking rigidity and strength.

PART XV

BEATING UP

Beating up follows picking, and is the function of the slay. To successfully control its movement a swift blow must be delivered to drive weft home, and movement must be retarded to afford time for a shuttle to pass across.

During the infancy of the power-loom inventors were somewhat at a loss to discover a good method of obtaining such a movement. Flat springs placed behind the swords were tried, the slay was pulled back slowly by the action of cams, and when the shuttle had passed across, the swords were suddenly liberated, and the stored-up energy in the springs was employed for beating up. An adjustable screw rendered it possible to obtain a light or heavy blow.

Digitized by Google

In the pneumatic loom the slay was pulled back along grooves in the framing by two weights, each hooked upon a separate strap; the latter, after passing over guide pulleys, were made fast to the slay back. Two cylinders having the usual piston and rod connections were employed, and the rods were also attached to the slay. At the proper moment compressed air was admitted into the rear end of each cylinder to drive the whole forward with the requisite velocity.

Both these appliances permitted a dwell of any duration, and the intensity of the blow was unaffected by the velocity of other parts of the loom. To this extent they were well adapted for the work to be done, but against such advantages must be set the disadvantage of moving a slay negatively, and thus depending largely for a constant stroke upon the regularity with which the fabric was drawn forward, for it is obvious that any variation in this respect would increase or diminish the forward traverse of the slay.

After the power-loom had been brought into more general use mechanism was introduced which embodied the principle of placing the slay under positive and constant control. Of the advantage of which there can be no question; but a result of doubtful utility followed—namely, that of altering the force of impact between cloth and reed with the speed of loom.

Several positive appliances have been used, such as parabolic wheels, cams, and cranks.

When the reed was required to give a sharp stroke upon the cloth, or when it was necessary to give as much time as possible for the shuttle to pass, Dr. Cartwright made use of an elliptical wheel, which he fixed upon the main driving shaft, and geared it with an eccentric secured

Digitized by Google

upon a crank shaft, to cause cranks to move the slay in such a manner that a large side of the elliptical wheel geared with the small side of the eccentric to give a superior speed for beating up, and a small side of the elliptical wheel geared with the large side of the eccentric to move the slay at an inferior speed, for, one was equivalent to a large driver and a small driven wheel, and the other to a small driver and a large driven wheel. Any such arrangement is, however, superfluous except for very wide looms.

When it is remembered that all machinists and manufacturers were familiar with the use and capacity of the cam, it is perhaps scarcely to be wondered at that this piece of mechanism appeared to them suitable for governing the slay.

One application consisted of two short shafts placed at opposite ends of the loom, to each of which a pair of fast and loose driving pulleys were attached. At the inner ends of such shafts a grooved cam, shaped to give the requisite eccentric movement, was fixed. Each connecting arm carried an antifriction roller that worked in a cam groove, and as the cams revolved, the slay was alternately pulled and pushed at varying speeds.

The difficulties arising from the use of two driving straps, and the consequent tendency for the slay to get slightly askew, together with other contrivances equally unmechanical, prevented this method from ever coming into general use, still, cams are used at the present time. Probably the best application has a main driving shaft extending from end to end of the loom, and the cams are placed upon it at each extremity, thus obviating the necessity for more than one driving strap, and at the same time keeping the slay parallel with the fabric.

Digitized by Google

Cams can be readily shaped to impart any degree of irregularity to a slay.

In modern looms the slay consists of a rocking-shaft *a* (Fig. 187), supported in cannons bolted to the end framing. Near each extremity of shaft *a* two upright arms or swords

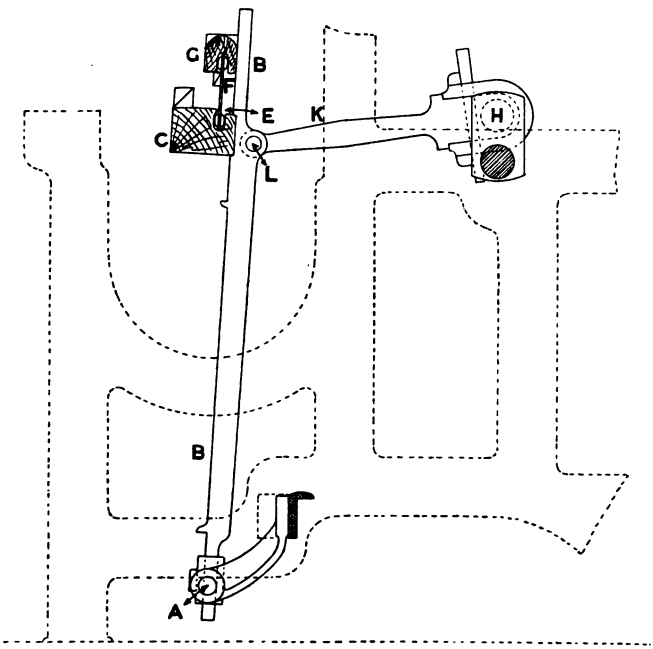

FIG. 187.

b are fastened; they are capable of adjustment, and support the slay sole *c*,—a heavy piece of wood strong enough to resist the constantly recurring shocks given as weft is driven home; it extends across the loom, and upon its upper surface a thin race board is fastened to serve as a guide for the shuttle. A longitudinal groove *e* is made

Digitized by Google

near the back of *c* wide enough to receive the lower rib of reed *f*. The slay cap *g* is similarly grooved on its under side to take the upper rib of *f*, and when bolted upon swords *b* the reed is firmly fixed in position.

In single shuttle looms the shuttle box bottom forms a continuation of *c*, but if two or more shuttles are employed separate boxes are fitted at one or both ends of the slay bottom.

Two cranks *h* are bent on the main driving shaft, to which connecting arms *k* are fastened by metal straps, gibs, and cotters. Arms *k* are also fulcrumed to swords *b* by connecting pins *l*. The revolving cranks set up a swinging motion in the slay, and when the latter is pulled from the fabric a shuttle is driven across; as it is pushed towards the fabric weft is forced into position by the reed.

When cranks were introduced for beating up it was known that a variable motion could be obtained from them, but for some time it was not clear as to how the parts could be accurately adjusted to give a required amount of variation in velocity between that for beating up and that for the passage of a shuttle. Engineers, however, overcame that difficulty, and now any one who wishes to become thoroughly conversant with the crank can do so by studying a good work on the steam-engine.

In order to apply cranks in the best manner, it is essential that the points where their usefulness may be effected shall be minutely examined.

These points are: (1) Relative positions of cranks and connecting pins; (2) diameter of circles described by cranks; (3) length of connecting arms.

Eccentricity is modified by altering the height of connecting pins with relation to the crank shaft centre;

Digitized by Google

therefore it is desirable that the best positions of both shall be defined.

If the beam steam-engine is taken as a guide, and similar parts of both machines are placed in the same

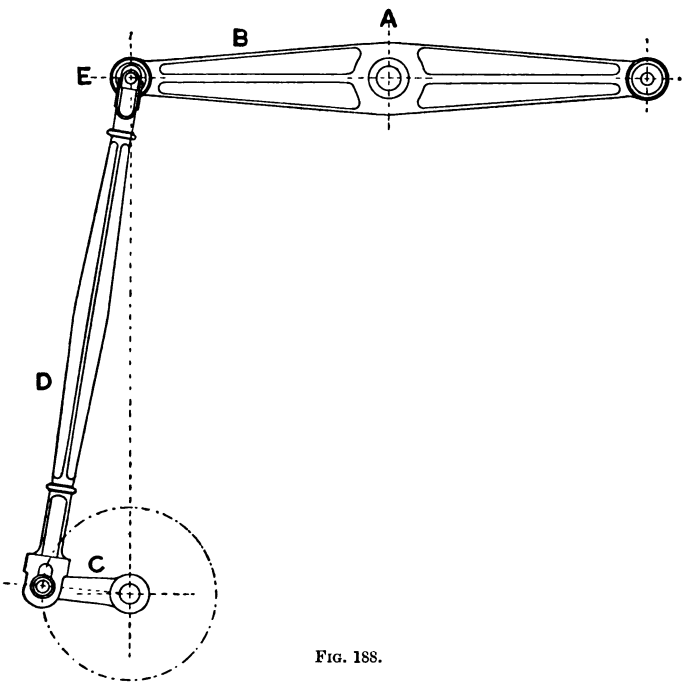

FIG. 188.

relative positions, they will then be capable of imparting a steady and useful motion to a slay.

Let the rocking-shaft of a loom be represented by beam centre *a* (Fig. 188), and a slay sword by half beam *b*, then crank *c*, connecting rod *d*, and connecting pin *e*, are similar in both.

When the beam of an engine is horizontal, the centre

Digitized by Google

of connecting pin is in the same vertical plane as the crank shaft centre; hence, if the beam oscillates, the pin *e* will move through equal angular spaces above and below its position in the horizontal beam; and there will be an equal and minimum divergence from the vertical plane.

In order to bring these parts of an engine into the positions they must occupy in a loom, it will be necessary to move them on centre *a* through an angle approaching 90°, as shown in Fig. 189; let point *a* represent the centre of rocking-shaft, and vertical line *b* a slay sword, for in the majority of looms the swords are vertical when reed and fabric are in contact; *c* the centre of connecting pin is, in narrow looms, frequently not more than 1½″ behind the vertical line, but in some wide looms it is carried back to the extent of 14″ by casting ears behind the swords; this is done to permit of short connecting arms and to avoid unduly enlarging the cranks. With *a*, *c* as radius describe arc *d*, to show the path of *c* when motion is imparted to it; next, find the position of *c* at the end of its journey by marking from *c* on line *d* point *c'* equal to the diameter of crank circle to be used. Bisect line *c*, *c'*, and draw line *a*, *a'*, which will pass through the centre of pin *c* at *c''*, exactly midway between the extreme points of its oscillation. A line, *e*, drawn at right angles to *a*, *a'*, and passing through *c''*, will contain the centre of crank *f*. To fix the position of *f*, mark upon line *e*, with *c''* as centre, the length of connecting arm, and the relative positions of the parts common to loom and engine are maintained, and will permit of any degree of eccentricity being given to a slay. This is, however, a question affecting loom-makers in designing looms more than manufacturers when using them.

Valuable eccentricity in a slay is represented by the difference in its velocity when the cranks are passing

Digitized by Google

through a given number of degrees above the front centres, and when they are passing through the same number of degrees below the back centres.

If the rotary motion of a crank is converted into re-

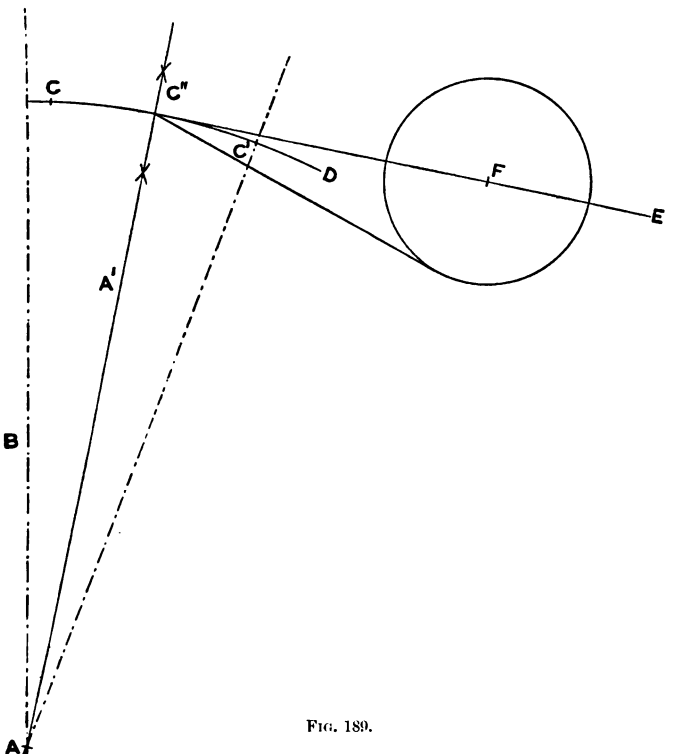

FIG. 189.

ciprocating rectilinear motion, it is found that equal angular spaces in the former produce unequal rectilinear spaces in the latter. With a long connecting arm the difference is slight, but with a short one it becomes very marked, as will be seen in Fig. 190, where *a* is the crank circle,

Digitized by Google

and 1 to 8 are equal angular spaces, *b* the length of connecting arm, and *c* a point to be moved in a horizontal plane. If the crank is moved

To the end of division	1,	point *c* will have	travelled	from *c* to 1
At the end	„ 2	„	„	1 „ 2
„	„ 3	„	„	2 „ 3
„	„ 4	„	„	3 „ 4

and in like manner back again to 8.

It will be observed that all the spaces 1 to 4 are unequal,

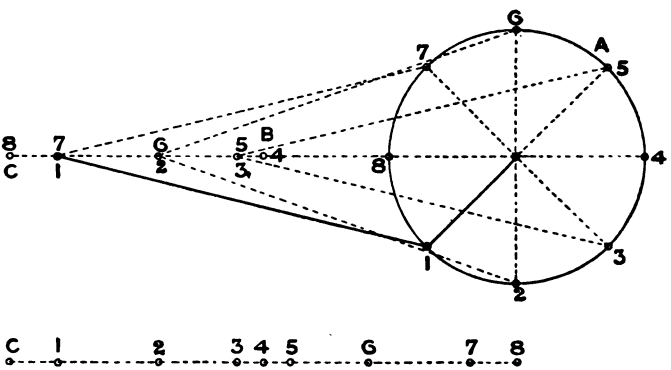

FIG. 190.

2 being the largest and 4 the smallest, but the difference between spaces 8 and 4 is of most importance, as 8 represents the speed of slay for beating up, and 4 its speed for a shuttle to pass across.

Cranks and connecting arms cause the slay to move irregularly, because the arms are pulled in a more or less diagonal direction, which carries one end nearer the crank centre and holds the other end at a fixed distance from it; therefore a crank in moving through 90° from front to bottom centres will pull the slay through a space equal to the radius of crank circle, plus the difference in length

Digitized by Google

between a straight and a tilted connecting arm when measured on a horizontal line; further, as the crank passes from the bottom to the back centre, the movement of the slay equals the radius of crank circle, minus the increase in length of arm due to changing it from a tilted to a straight position, if measured as stated above.

By means of a graphic sketch the precise amount of variation can be found in a few minutes. Fig. 191 is an example of this: *a*, the circle described by crank, *b*, *c* length of connecting arm. When the crank has passed from *c* to *c'*, arm *b'*, *c'* is tilted, and therefore shortened if

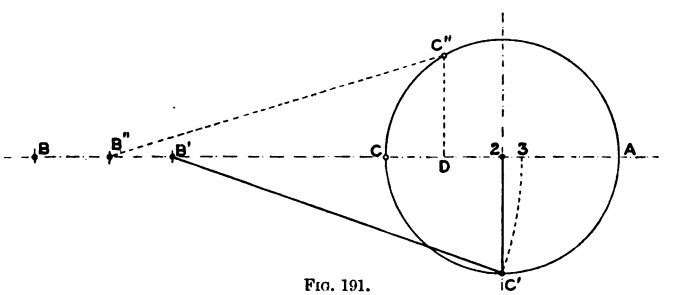

FIG. 191.

measured on line *a*, *b*. To find how much it is diminished in length take *b*, *c* as radius, and from point *b'* describe arc *c'*, 3; space 2, 3 represents the loss in length, and *c*, 3 the actual movement of connecting pin. Two things are obvious: first, that the crank has caused the pin to be moved through space *c*, 2; and secondly, tilting arm *b*, *c* has further moved it through space 2, 3; hence, in solving this problem, these are the two points to be determined.

Calculations can also be made to ascertain the variation; thus, if the crank circle has a radius of $2\frac{1}{2}''$, and the connecting arm is 10″ long, the actual movement of connecting pin between, *a* top and front centres, and *b* bottom to back

Digitized by Google

centres, can be found by considering that two sides of a right-angled triangle are given to find the length of the third, for radius of crank circle equals altitude, length of connecting arm equals hypothenuse, and base is required. The length of base is found by squaring both sides, subtracting one square from the other, and extracting the square root from the remainder $= \sqrt{10^2 - 2{\cdot}5^2} = 9{\cdot}68'' =$ the length of tilted arm or a loss of $10 - 9{\cdot}68 = 0{\cdot}32''$; hence actual movement of connecting pin for each quarter of the crank's revolution is

Top centre to front .	2·5″	radius of circle	+ 0·32 = 2·82″
Front centre to bottom .	2·5″	,,	+ 0·32 = 2·82″
Bottom centre to back .	2·5″	,,	− 0·32 = 2·18″
Back centre to top .	2·5″	,,	− 0·32 = 2·18″
			10·00″

the complete movement of connecting pin for one revolution of crank.

It is more difficult to determine how far a connecting pin travels for other than 90° or 180°, owing to the want of sufficient data—namely, the altitude of the triangle formed; but by the aid of trigonometry, or by the use of the following table of natural sines and versed sines, the movement is readily obtainable :—

Digitized by Google

Table showing the Motion of the Crank

(Crank = 1 inch)

Degree.	Sine.	Versed Sine.	Degree.	Sine.	Versed Sine.	Degree.	Sine.	Versed Sine.
1	·0174	·0001	31	·5150	·1428	61	·8746	·5152
2	·0349	·0006	32	·5299	·1519	62	·8829	·5305
3	·0523	·0013	33	·5446	·1613	63	·8910	·5460
4	·0697	·0024	34	·5592	·1709	64	·8987	·5616
5	·0871	·0038	35	·5735	·1808	65	·9063	·5773
6	·1045	·0054	36	·5877	·1909	66	·9135	·5932
7	·1218	·0074	37	·6018	·2013	67	·9205	·6092
8	·1391	·0097	38	·6156	·2119	68	·9271	·6254
9	·1564	·0123	39	·6293	·2228	69	·9335	·6416
10	·1736	·0152	40	·6427	·2339	70	·9397	·6579
11	·1908	·0183	41	·6560	·2453	71	·9455	·6744
12	·2079	·0218	42	·6691	·2568	72	·9510	·6909
13	·2249	·0256	43	·6819	·2686	73	·9563	·7076
14	·2419	·0297	44	·6946	·2806	74	·9612	·7243
15	·2588	·0340	45	·7071	·2929	75	·9659	·7411
16	·2756	·0387	46	·7193	·3053	76	·9702	·7580
17	·2923	·0437	47	·7313	·3180	77	·9743	·7750
18	·3090	·0489	48	·7431	·3308	78	·9781	·7920
19	·3255	·0544	49	·7547	·3439	79	·9816	·8092
20	·3420	·0603	50	·7660	·3572	80	·9848	·8263
21	·3583	·0664	51	·7771	·3706	81	·9876	·8435
22	·3746	·0728	52	·7880	·3843	82	·9902	·8608
23	·3907	·0795	53	·7986	·3981	83	·9925	·8781
24	·4067	·0864	54	·8090	·4122	84	·9945	·8954
25	·4226	·0937	55	·8191	·4264	85	·9961	·9128
26	·4383	·1012	56	·8290	·4408	86	·9975	·9302
27	·4539	·1089	57	·8386	·4553	87	·9986	·9476
28	·4694	·1170	58	·8480	·4700	88	·9994	·9651
29	·4848	·1253	59	·8571	·4849	89	·9998	·9825
30	·5000	·1339	60	·8660	·5000	90	1·0000	1·0000

The sine of any degree is the length of a line dropped from a point in the periphery of a circle at right angles to the diameter line.

The versed sine is the space between the sine and

Digitized by Google

periphery of circle when measured on the diameter line.

For example, let a, b (Fig. 191) be the diameter line, c'' a point 60° above a, b, then c'', d is the sine and also the altitude of triangle b'', d, c'', b''; and d, c is the versed sine which shows the movement of pin due to crank. If the circle has a radius of 4″, and the arm is 12″ long, the sine of 60° being 0·866025, and the versed sine 0·5 for a circle 1″ in radius, then for a circle 4″ in radius $0{\cdot}866 \times 4 = 3{\cdot}464''$, and $0{\cdot}5 \times 4 = 2''$ $\therefore$ $\sqrt{12^2 - 3{\cdot}46^2} = 11{\cdot}5''$ the length of base, and also inclined arm, or a loss of $12'' - 11{\cdot}5'' = 0{\cdot}5''$, and $2'' + 0{\cdot}5'' = 2{\cdot}5''$ the motion of connecting pin.

The eccentricity of a slay can be obtained by taking a given number of degrees at both front and back centres, ascertaining the movement at each place, and subtracting one result from the other. It will be noticed that the more a connecting arm is tilted the greater the eccentricity: hence it follows that increasing the throw of crank, shortening the connecting arm, or both, will increase eccentricity, just as diminishing the throw of crank and lengthening the connecting arm will produce opposite results.

Consequently if it is desired to obtain a definitely increased or diminished amount of eccentricity, the rule already given is applicable. For example, a $2\frac{1}{2}''$ crank in turning through an angle of 180° from the front centre, will, during the first 90° of movement, pull the connecting pin of a 10″ arm $2{\cdot}5 + 0{\cdot}32 = 2{\cdot}82''$, and for the second 90° it will move $2{\cdot}5 - 0{\cdot}32 = 2{\cdot}18''$, hence $2{\cdot}82 - 2{\cdot}18 = 0{\cdot}64''$ eccentricity. Now what size of crank must be used with a 10″ arm to give 0·8″ eccentricity?

$$0{\cdot}64 : 0{\cdot}8 : : 2{\cdot}5^2 : 7{\cdot}8125$$

$\sqrt{7{\cdot}8125} = 2{\cdot}795''$ the crank required.

Digitized by Google

For Proof.

$\sqrt{10^2 - 2{\cdot}795^2} = 9{\cdot}6014$

$10 - 9{\cdot}6014 = 0{\cdot}3986''$ due to tilting the arm.

$2{\cdot}795 + 0{\cdot}3986 = 3{\cdot}1936$

$2{\cdot}795 - 0{\cdot}3986 = 2{\cdot}3964$

·7972 eccentricity.

To determine the length of stroke to be given to a slay, width of loom, make of fabric, and to some extent the breadth of shuttle, must be taken into account.

Width of loom, because revolutions of cranks must be diminished as width is increased; now this obviously results in decreasing the energy stored up in a slay, whilst energy required is in proportion to increased width of fabric; therefore to maintain energy, weight of slay and diameter of crank circle should be increased and the connecting arms proportionately shortened.

Although it is well known there is a speed above and below which a loom does not increase its productiveness, manufacturers do not follow any definite rule in fixing the relative velocities of looms differing in width but producing similar fabrics; nevertheless, this is a subject that each might determine for himself by comparing the lengths of weft consumed in a given time by looms weaving wide and narrow pieces. Then, if the loom using most weft is taken as a model, the best plan for speeding one of any other width is to cause the shuttles in both to move at the same velocity.

For instance, if one slay 50″ long from box to box, weighs 150 lbs., is moved by 3½″ cranks and 14″ arms, and another slay 100″ long is moved by 4½″ cranks and 9″ arms, both producing similar fabrics, and it is desired to

Digitized by Google

find what relation the revolutions and weight of the latter should bear to those of the former.

The revolutions will be in inverse proportion to width $\therefore$ 100 : 50 :: 2 : 1, but force of impact must be in proportion to width $\therefore$ 50 : 100 :: 1 : 2, if both move at the same velocity; but this is not the case, for one has $3\frac{1}{2}''$ and the other $4\frac{1}{2}''$ cranks, so to find the velocity of each, points in the circles 20° above the front centres are taken. The sine of 20° = 0·34202, and versed sine = 0·06037.

$$0{\cdot}34202 \times 3{\cdot}5 = 1{\cdot}197''$$
$$0{\cdot}34202 \times 4{\cdot}5 = 1{\cdot}539''$$
$$0{\cdot}06037 \times 3{\cdot}5 = 0{\cdot}211''$$
$$0{\cdot}06037 \times 4{\cdot}5 = 0{\cdot}272''$$
$$\sqrt{14^2 - 1{\cdot}197^2} = 13{\cdot}94''$$
$$14 - 13{\cdot}94 = 0{\cdot}06'' \text{ the shortening of the } 14'' \text{ arm.}$$
$$\sqrt{9^2 - 1{\cdot}539^2} = 8{\cdot}86''$$
$$9 - 8{\cdot}86 = 0{\cdot}14'' \text{ the shortening of the } 9'' \text{ arm.}$$

Therefore, as the versed sine of the $3\frac{1}{2}''$ crank is 0·211", the connecting pins will have moved when the cranks are on the front centres 0·211 + 0·06 = 0·271". The $4\frac{1}{2}''$ cranks move their connecting pins 0·272 + 0·14 = 0·412".

Force varies as the square of the velocities $\therefore$ $0{\cdot}412^2$: $0{\cdot}271^2$ :: 150 lbs. : 65 lbs. If the cranks in two looms of equal width made the same number of revolutions per minute, a slay weighing 65 lbs. would deliver a blow equal in weight to that of 150 lbs., assuming the former to be governed by large cranks and short arms, and the latter by small cranks and long arms; but it has been shown that force required is as 1 : 2 $\therefore$ $1^2 : 2^2$ :: 65 : 260 lbs. the weight of slay.

Velocity at any other angle smaller or larger than 20° can be obtained in the same manner.

A reed moves through a space greater than the throw of

Digitized by Google

crank, because the connecting pins are placed below the point of its contact with the fabric, and the difference is in proportion to the distance between those points; thus, if centre of rocking-shaft is 28″ from centre of connecting pin, and 31″ from fabric, and a crank describing a circle of 5″ is used, the movement is as 28 : 31 :: 5 : 5·33″.

Looms constructed for weaving light and medium goods have the swords placed vertical when reed and fabric are in contact to prevent passing and repassing the centre of rocking-shaft at each revolution of the cranks, and some claim for this position that the blow is firmer because it is delivered at right angles to the cloth, but this is clearly not the case, for cloth is invariably depressed between breast beam and harness; hence to strike a blow at right angles the swords must lean towards the cranks when the latter are on the front centres. In wide and heavy looms other considerations have weight, probably the principal one being that their large cranks would carry the race board too low when the slay was pulled back, to permit of the bottom warp line touching it, and unless this contact is maintained, shuttles are in constant danger of flying out. To prevent which it is not unusual to find the swords vertical when the cranks are on the top centres. But whether the swords are vertical, inclined forward or backward, the rule previously given for finding the relative positions of rocking-shaft, connecting pin, and crank centres can be used, provided the first line erected represents the most forward position of the reed.

One thing must be insisted upon—namely, that whatever position the swords occupy when reed and cloth touch, the race board must be bevelled until it is parallel with the bottom shed, as the shuttle is moving across.

In a few looms the slay swings from above, but as this

Digitized by Google

system is fast becoming obsolete, it is not necessary to devote any space to an explanation of the scheme of working.

In carpet and certain other heavy looms it has been found necessary to give the weft two blows in quick succession, and the plan adopted is to actuate a knuckle joint by a crank in such a manner that it is straightened twice for each revolution of the crank, and in straightening the weft receives a blow. In Figs. 192 and 193 *a* is a sword,

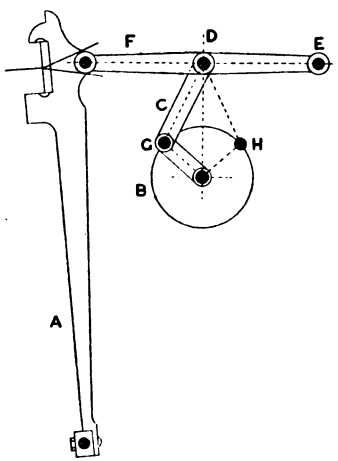

FIG. 192.

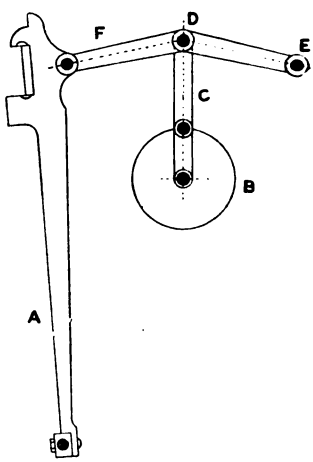

FIG. 193.

b a crank, *c* a connecting arm, *d* the knuckle joint, *e* is hinged to a part of the framing, and *f* is attached to the slay by the usual connecting pin.

In one sketch the knuckle joint is straight, but when crank *b* moves from point *g* to the top centre, it is pushed up, and when *c* reaches point *h* on the opposite side, the joint is again straightened.

The time that elapses between the first and second straightening can be altered by moving the crank centre up

Digitized by Google

or down; in the former it will increase, and in the latter it will decrease.

PART XVI

THE REED

is used to beat up weft after being inserted by the shuttle; it helps to keep warp threads in their proper positions; it forms a back guide for the shuttle to run against; and it determines the fineness of the fabric.

Prior to 1738 reeds were made of split cane, or reed; they were split by pressing reeds against a taper spindle, from which knives radiated at the required distance apart; but in the above-named year, John Kay used flattened brass or iron wire instead, and the substitution was everywhere welcomed as an important improvement that left the reed almost perfect.

Reed-makers call the flattened pieces of wire dents (namely, teeth), and they are made from the best Swedish iron wire, which is flattened to any extent by passing it through rollers; it is next straightened on its edges by taking it between two plates and forcing it in a serpentine course amongst pegs; the ribbon is then cut to a uniform width equal to that of the dent, rounded on the edges, smoothed by files placed to act on every part of the wire as it passes forward, straightened on the flat sides, and sent to the reed-maker, who passes it through a machine that automatically cuts it into equal lengths, inserts each in position, winds, presses, and entirely finishes the reed at the rate of from 300 to 400 dents per minute.

A finished reed consists of a series of parallel flat wires *a* (Fig. 194), secured at their extremities by wooden

Digitized by Google

rods *b*, approximately half-round in section, and bound together by a tarred cotton cord *c*, passing between the dents and round two rods. The cord usually consists of fourfold 32^s twist, folded to suit the space between dent and dent; but round iron wire is occasionally used in place of cotton.

For cotton fabrics reeds have from 6 to 90 dents to the

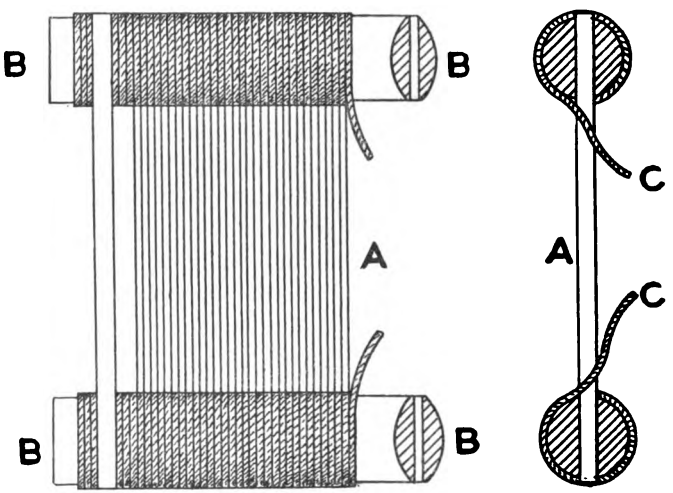

FIG. 194.

inch. They are sometimes made double by placing two sets of dents between ordinary laths, so that one set comes opposite the spaces of the other. Such reeds are used to keep the loose fibres of unsized warp from twisting and choking the shed.

A reed is so constructed that a definite number of dents will be contained on a given length; this is termed the count, pitch, or number of the reed; but the naming of reeds has been complicated without giving the slightest

Digitized by Google

advantage to anybody. This is proved by the large number that have been discarded within the last thirty years in favour of two or three more rational methods.

The following classified list of some reeds still in use will probably place the matter in its simplest form :—

Reeds named from the number of dents contained on one inch—

Radcliffe. Huddersfield. American.

Reeds named from the number of dents contained on a certain number of inches—

Stockport, 2″. Scotch, 37″. Macclesfield, 36″.

Reeds named from the number of groups of dents on a certain number of inches, each group consisting of 20 dents and called a beer, or porter—

Bolton, 24¼″. Bradford, 36″. Dundee, 37″. Worsted, 54″.

On 19 dents to a group, or beer—

Dewsbury, 90″.

On 5 dents to a group, or beer—

Holmfirth, 12″.

In some silk reeds, pitch, ends per dent, and width go together as 2000 reed, 8 thread 24″, or 1800 reed, 4 thread 18″.

Of the foregoing the Stockport reed is in by far the most extensive use, and it bids fair to supersede most, if not all, others in Lancashire.

The most useful comparison of reeds is by the number of dents per inch for a number 1 reed of different counts. To find which use the following Rule :—

$$\frac{\text{counts} \times \text{dents per beer}}{\text{inches in basis}}.$$

Thus Stockport, $\frac{1 \times 0}{2''} = 0{\cdot}5''$. Bolton, $\frac{1 \times 20}{24{\cdot}25''} = 0{\cdot}8247''$.

Digitized by Google

Radcliffe, No. 1 reed	= 1	dent per	inch.
Huddersfield	„ = 1	„	„
American	„ = 1	„	„
Stockport	„ = 0·5	„	„
Scotch	„ = 0·02702	„	
Macclesfield	„ = 0·02778	„	
Bolton	„ = 0·8247	„	
Bradford	„ = 0·5556	„	
Dundee	„ = 0·5405	„	
Worsted	„ = 0·3704	„	
Dewsbury	„ = 0·2112	„	
Holmfirth	„ = 0·4167	„	

To convert the count of one reed to its equivalent count in another reed—

$$\frac{\text{given count} \times \text{dents per beer} \times \text{inches in basis of required}}{\text{inches in basis of given} \times \text{dents per beer of required}}.$$

Example.—What does a 40 reed Bolton count equal in the Dundee and Stockport systems?

$$\frac{40 \times 20 \times 37''}{24{\cdot}25'' \times 20} = 61{\cdot}03 \text{ Dundee reed, and}$$

$$\frac{40 \times 20 \times 2''}{24{\cdot}25'' \times 0} = 66 \text{ Stockport reed.}$$

PART XVII

MOTIONS TO STOP THE LOOM IF WEFT IS ABSENT

When automatic looms were introduced it at once became apparent that additional parts were necessary to ensure their practical utility. Dr. Cartwright saw that some appliance must be added to stop a loom immediately weft gave out, so that a fabric should not be rendered unsightly by the presence of great cracks.

Digitized by Google

To meet this difficulty he fixed a wire inside the shuttle and near its eye to support a swinging staple, the latter to be held in a horizontal position by the unbroken weft; but when a fracture occurred the staple assumed a vertical position, and was caught by a hook placed inside a groove in the slay and near the entrance to one shuttle box. This hook acted through a lever upon the driving belt, and brought the loom to a stand.

Dr. Cartwright's plan was not satisfactory, nor was any striking success achieved by later inventors until the introduction of the "fork and grid," which was dated 1831, and claimed by Gilroy; but it was patented in England by Ramsbottom and Holt in 1834, improved by Kenworthy and Bullough in 1841, and left in 1842 by James Bullough in much the same condition in which it is found to-day—namely, with a brake attachment to make its action certain and instantaneous.

From the last-named year this beautiful, delicate, and simple motion has held its position against all rivals, and now, except for special work, is applied to all looms.

It is situated at one side of a loom between the fabric and shuttle box (see Figs. 195 and 196): *a* resembles an ordinary three-pronged fork, having the prongs bent almost at right angles to the main part; the end representing the handle is bent in the same direction about $\frac{3}{8}$ of an inch from the end. It is freely balanced on a cross pin which passes through the horizontal part of the fork, but leaves the prong end somewhat lighter than the other.

The fork holder *b* is at right angles to, and fixed by a set screw to fork lever *c*. The latter occupies a horizontal position immediately behind the setting-on handle *d*, and is hinged at its outer end.

The short bend of the fork rests upon the upper end of

Digitized by Google

hammer lever *e*, which at that point is more or less semi-circular in form, and furnished with a catch corresponding with, and capable of taking hold of, the hook upon fork *a*.

Hammer lever *e* is bell-cranked, and its lower end rests upon a cam *f*, fixed to the bottom shaft of the loom. As *f* rotates a vibrating motion is given to *e*, causing its upper arm to move forward once at every second pick.

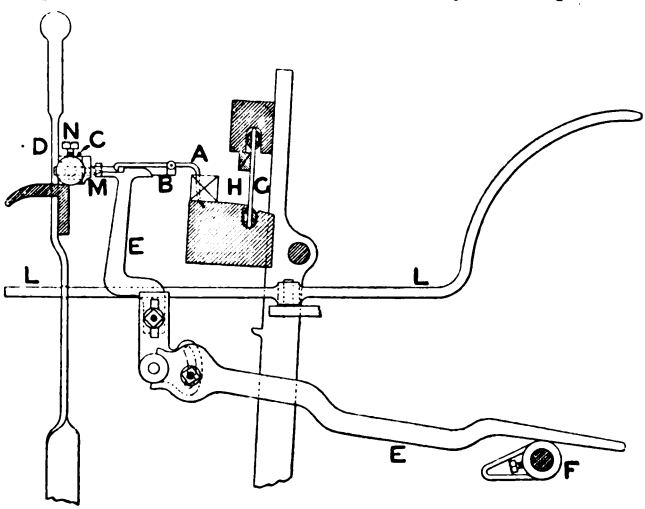

FIG. 195.

Between the reed and shuttle box a grid *g* is fixed vertically, so that the fork prongs can pass through without obstruction at each forward stroke of the slay.

Its action is as follows:—When the slay moves forward weft *h* is pushed against grid *g* by the fork prongs, and it offers sufficient resistance to prevent the fork from passing through, and also to cause the shank of the latter to tilt up at the moment when the hammer on *e* begins to

Digitized by Google

vibrate, consequently contact between them becomes impossible; but should weft be absent the fork prongs pass through the grid, and fork hook and catch remain in contact, the hammer moves forward and carries with it fork, fork holder, and fork lever. The latter pushes the setting-on handle out of retaining notch *k*, and its spring

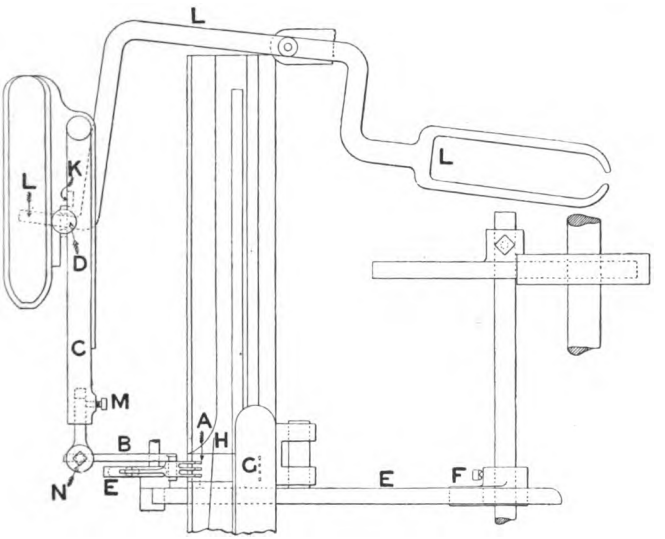

FIG. 196.

forces the driving strap upon the loose pulley by means of lever and strap fork *l*.

As this mechanism is only placed at one side of a loom it can only act on alternate picks of weft, but if the parts are properly adjusted the cranks will not revolve more than twice after weft is broken before the loom is brought to a stand. Considerable care is, however, required to so adjust the parts that a loom will stop when weft is absent and continue running when it is present. To ensure the

Digitized by Google

former, fork prongs must not touch any part of the grid or race board, and accurate setting is provided for by an adjusting screw *m* on the fork lever, which allows the prongs to be elevated or depressed, and the fork to be moved laterally to the right or left. A second setting screw *n* on the fork holder permits of a forward or backward adjustment at pleasure.

If the fork passes too far through the grid bars there is a tendency to cut the weft, but if it does not pass far enough through, its hook will not be lifted above the hammer. Also if a shuttle rebounds weft is slackened, and will not then tilt the fork sufficiently. Any one of these things is sufficient to bring a loom to a stand when it should be running; therefore, in order to keep a loom at work for its maximum time, fork prongs should pass just far enough through the grid to cause weft to lift the fork hook clear of the hammer catch as the latter begins its forward movement.

A hammer lever, if accurately timed with the slay, will commence to move when reed and fabric are in contact, so that if weft is broken hammer *e* will catch the fork hook and throw the belt upon the loose pulley, but if weft is unbroken the fork hook will be kept up until *e* has moved forward far enough to miss it, and thus the loom will continue to run.

The fork lever also requires attention; its movement should be just sufficient to push the starting handle out of its notch. The traverse of this lever is regulated by moving its fulcrum pin nearer to or farther from the fabric. Lateral movement in the slay will frequently cause the fork lever to tilt when weft is broken, and permit the loom to continue running.

Digitized by Google

The Brake

has largely contributed to render the present high speeds possible, for previous to its introduction a speed of from 100 to 120 picks per minute was considered high.

As ordinarily made it is simply a lever, *a* (Figs. 197 and

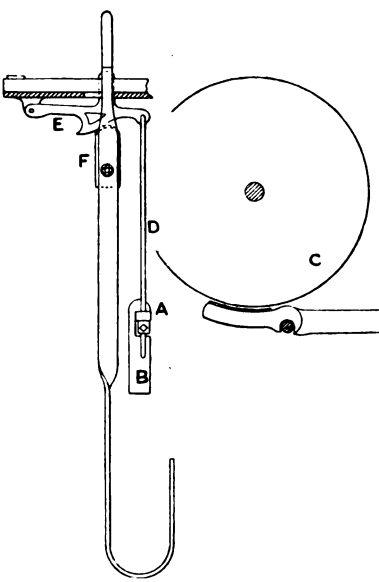

Fig. 198.

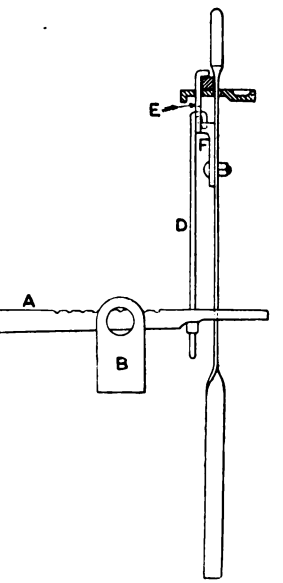

Fig. 197.

198), having one straight arm, upon which an adjustable weight *b* is hung, and the other arm, called the brake clog, is curved and covered with leather on the inside for the purpose of increasing its holding power. It is placed immediately below fly wheel *c*, and so governed that both can be instantly brought into contact, either when the weft breaks or when the loom is stopped by other means.

Digitized by Google

The weighted end of *a* is connected by link *d* to a tumbler lever *e*, which rests upon and is in turn actuated by stud and bowl, or by a curved bracket *f* affixed to the setting-on handle. When the loom is started, *e* is raised by the pressure of *f* against its full side, and link *d*, by elevating the heavy end of *a*, moves the brake clog out of contact with *c*; but if the weft fork acts *e* falls, and brake *a* bears upon fly wheel *c*, and brings the loom to a stand.

It is questionable whether the ideal brake has yet been invented, for, simple as its function appears to a casual observer, it is attended with difficulties that have proved troublesome to overcome. A brake should not impart a shock or strain to any part of a loom when brought into operation. It should not reduce the impetus of a slay when the last pick is driven home, but should allow a loom to run freely until the driving strap has been traversed upon the loose pulley, and then bring it to a stand in the following half pick. It should always stop a loom at the back centre when the shuttle is at the fork side if weft is broken, but when stopped by the weaver for piecing broken threads the top centre is the most convenient place. It should not be any encumbrance or add to the labour of the weaver. In check and other looms, where it is essential that the pattern shall be unbroken, means should be provided for holding the brake off when once removed until the proper starting-place, or pick, is found.

An ordinary brake puts considerable strain upon the moving parts by acting before the driving strap is off the fast pulley, and thus, as it takes about one pick to move the strap, the crank shaft is forced against the top cap, the momentum of the slay is checked, the last pick is not properly beaten up, and the brake, by constantly acting in the same spot, wears the shaft, bearings, wheels, and

Digitized by Google

brake. The last named results in the loom stopping in different places.

Some brakes serve merely as an appendage to the weft fork; others act whenever the spring handle is moved. The latter, all things considered, appear to be preferable.

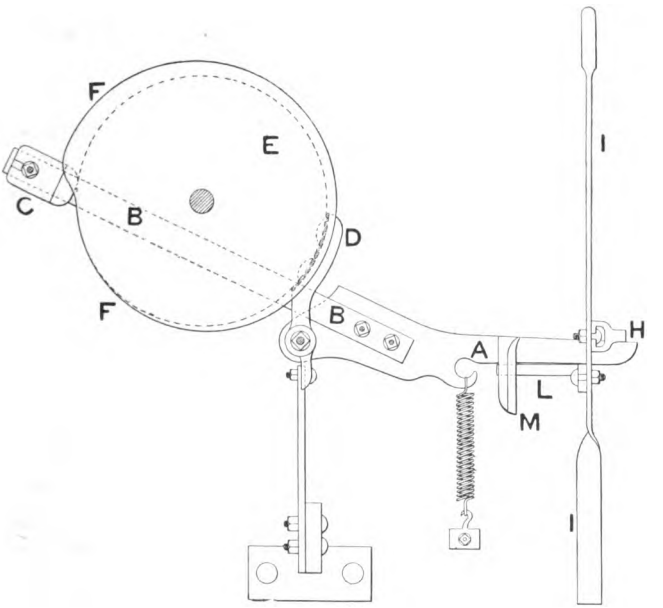

FIG. 199.

Haythornethwaite's brake seems to be constructed on original lines, and contains several good points.

It is a double brake. The lever *a* (Figs. 199 and 200) is actuated as in an ordinary brake by a finger *l* on handle *i* that pushes up the curved arm *m* of lever *a*, the last named has a connection *b* that supports the back brake clog *c*, and a second clog *d*, also attached to *a*, brakes at the front of

Digitized by Google

fly wheel *e*. A spiral surface *f* forms part of *e*, but a groove *g* is left up the centre, except at one point where it runs diagonally to the outside.

When the loom is working clog *c* is out of contact, and the neb at its extremity is in line with groove *g*; but if the weft breaks the fork lever begins to be drawn back as the crank is leaving the front centre, and pushes the spring handle off as the bottom centre is reached.

Lever *a* immediately drops, and the neb of *c* enters groove *g*, but the brake remains inoperative until the front centre is again reached, and with it the diagonal point of junction between *e*, *f*, then the neb of *c* is acted upon by

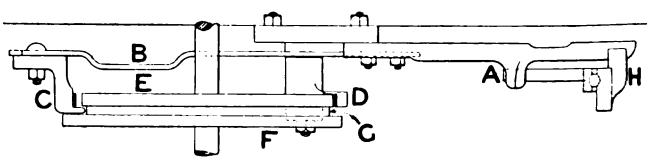

FIG. 200.

the spiral surface of brake wheel *f*, which draws it upon its enlarging periphery, and the loom is brought to a stop every time in exactly the same spot, with the slay a little beyond the back centre, and the shuttle at the fork side.

As clog *c* is pushed back it pulls clog *d* into contact with fly wheel *e*, and slightly elevates the forward end of *a* until it rests against the wedge-shaped fixing *h* on spring handle *i*, when further upward movement in *a* is checked, and both faces of the fly wheel are held as in a clip without putting unnecessary strain upon the working parts or checking the momentum of the slay in beating up the last pick. Spiral *k* holds *a* steady when the loom is working.

Digitized by Google

Friction pulleys have been advocated for loom-driving instead of fast and loose ones. It is argued that by their instantaneous action less power would be required to brake and pick a loom than at present; the former because the driving power ceases at once with the severed connection, the latter because full power would be exerted to deliver the first pick.

Centre Weft Fork

An ordinary side weft fork is not well adapted to pick and pick motions, for two shuttles may be driven in succession to the fork side of a loom, and the weft of one be absent without the loom being brought to a stand. As the number of shuttles is increased the difficulties become greater, so with a view to overcoming them a centre fork was introduced, and its inventor claims for it that the weft stop motion for pick and pick looms is perfected, also that it is available for alternate picking.

As its name implies, this fork works in the centre of the reed space; it is made to feel for each separate pick, and in case one is absent the loom is stopped.

Figs. 201, 202, and 203 are plan, front and side elevations respectively: *a* is the slay bottom in which a transverse groove *b* is cut to allow the prongs of fork *c* to enter and sink below the race board. A bracket *d*, screwed upon the front of slay sole, supports and guides the moving parts. Fork *c* consists of two prongs, hook *e*, and arm *f*, all fastened to and vibrating with pin *g*. The fork is made to swing on the centre *g* by the fork shifter *h*, which, as the slay falls back, rises and pushes up *c* far enough to allow a shuttle to pass beneath its prongs; arm *f* regulates to some extent the swing of *c* by preventing it from moving too far

Digitized by Google

in case a jerk results from the contact of *h* with *e*. This is done by *f* entering a slot in *h* and rising to the top, where further traverse is impossible.

Two thin iron plates *d'* screwed upon *d* form grooves for shifter *h* to move in. Rod *i* is hinged to *h*, and passes

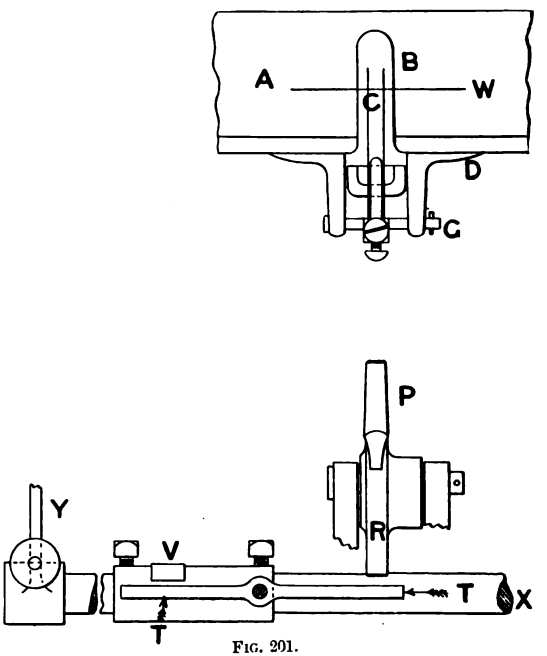

FIG. 201.

through two holes, one drilled in the upper, and the other in the lower flanges of a forked guide *k*, which is free to swing upon holder *l*; the latter is bolted upon the top of bracket *m*. A foot on *m* rests upon the floor, and the whole is secured by set screws to a cylindrical bar *n*, extending across the loom. Rod *i* is furnished with an adjustable

Digitized by Google

stop hoop *j*. It constantly presses against the upper flange of *k*, and must be set, when the slay is thrown back, to elevate fork *c* sufficiently.

Guide *k* being immediately below shifter *h* when fork *c* is at its highest point, it follows that the space between the top flange of *k* and fork *c* increases as the slay moves forward, and therefore *c*, *h*, *i* fall by their own weight until the prongs of *c* are arrested by weft *w* lying across gap *b*. The fork is prevented from falling farther until its extreme ends are pulled by the slay beyond the weft. It then sinks to the bottom of groove *b*, but meanwhile the slot in *h* has fallen too low for hook *e* to take into it, so the loom continues in motion. On the other hand, if weft is absent, prongs *c* fall at the same speed as shifter *h*, and hook *e* suspends the latter from the end of its slot. A raised piece *o* is thus held opposite to, and the slay moves it into contact with, a swivelling finger *p*, which turns on centre *q*, and is fixed by a bracket against the inside of breast beam *s*. On the under side of *s* a lever *t*, fulcrumed at its centre,

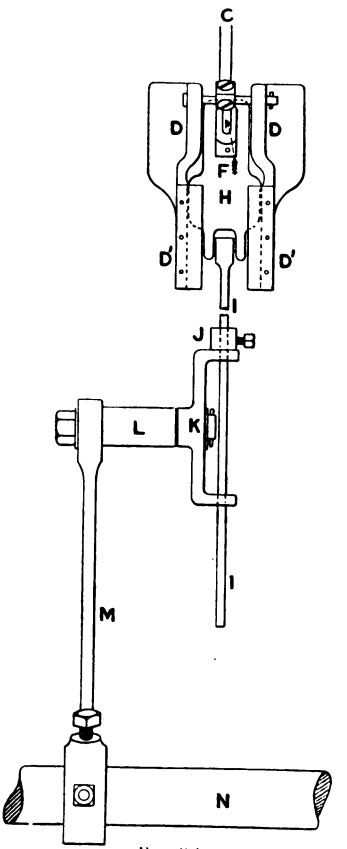

FIG. 202.

Digitized by Google

has one end pushed back by finger *r*, and the other pushed

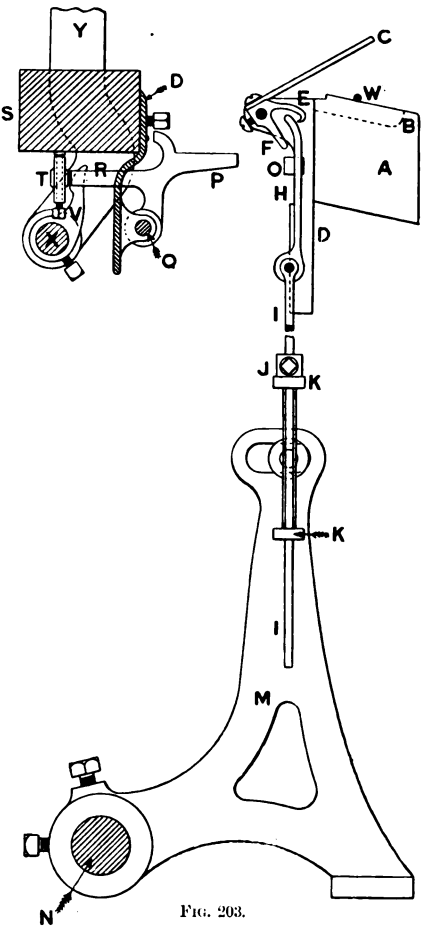

FIG. 203.

forward and pressed against arm *v*; *v* being set-screwed upon shaft *x*, an oscillating movement is set up, and starting

Digitized by Google

handle *y* is moved in the usual manner to shift the strap upon the loose pulley.

A centre fork is good in principle, but it requires careful setting, and if warp and weft are thin, the weft is liable to be looped at the under side where the prongs act.

PART XVIII

MECHANISM FOR GOVERNING WARP

Power-loom weavers have inherited the difficulties of warp management from their predecessors of the hand-loom, and the problem has baffled the inventive powers of machinists and others for fully a century, during which time hundreds of patents have been obtained, and probably thousands of experiments have been made without marked success.

The causes of failure will be more apparent if the problem is stated as it presents itself to a weaver.

In the first place, a let-off motion should so act upon the warp that an equal strain will be maintained whether a shed is open or closed, and irrespective of the length of warp upon a beam, and without the necessity of adjustment from the beginning to the end of a warp.

In the second place, warp should be positively delivered in lengths exactly corresponding with those drawn away by the taking-up roller.

In the third place, the parts added should not be of such a complicated nature that more overlookers will be required to keep a given number of looms running.

Little more than a century ago each warp beam had two holes bored through it near one end, and at right angles to each other. Into one of these, a rod *b* (Fig. 204), long enough to rest against cross rail *c*, was pushed, to hold

Digitized by Google

the warp rigid during the weaving of from 2″ to 3″ of fabric, after which it became necessary to remove the rod from hole 1, unwind warp from the beam, and place it in hole 2.

The defect of this system consisted in putting a continually increasing strain upon the warp during weaving so long as *b* occupied a fixed position.

About the year 1788 a weaver named Clarke adopted a simple contrivance that largely increased the production of

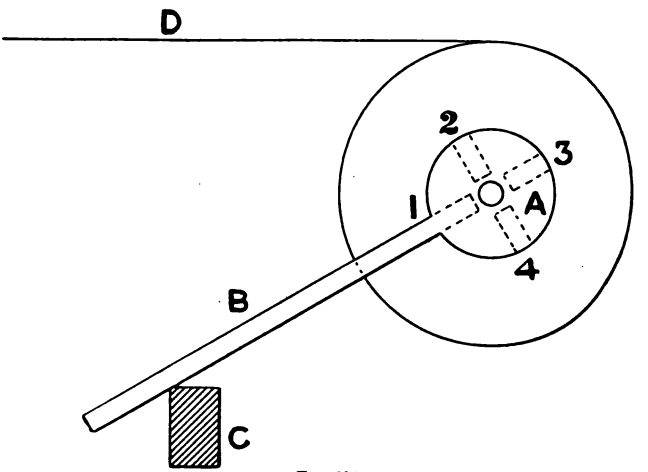

FIG. 204.

a loom, and at the same time governed the warp more effectively. He coiled two ropes two or three times round opposite ends of beam *a* (Fig. 205), fastened heavy weights *b* to the outer, and light balance weights *c* to the inner ends of the ropes; this, in addition to enabling a weaver to draw warp forward without going behind his loom, provided a vastly superior method of controlling it; for to a large extent ropes and weights reciprocate with the shedding motion, but not to the extent of keeping an equal tension

Digitized by Google

upon the warp in all its varying positions; yet, when a shed opens, warp is drawn from the beam, and when it closes, as much of it as is not used up in the fabric is wound on again.

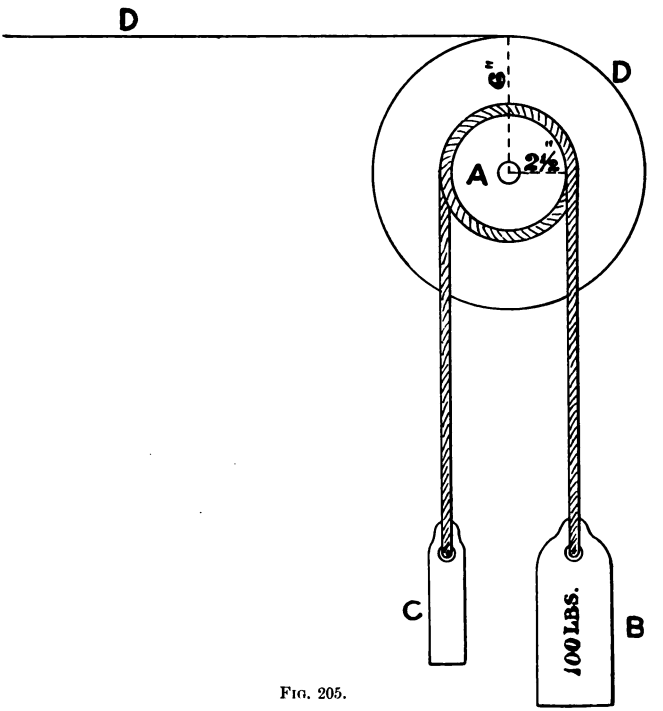

FIG. 205.

A further defect occurs at every revolution of the beam, produced by the extraction of a layer of yarn from its periphery, without simultaneously altering the circumference of the roller where the ropes act. To rectify which would necessitate weight being removed in proportion to the decreased diameter of coiled warp.

Digitized by Google

For example, let the radius of *a* (Fig. 205) equal $2\frac{1}{2}''$, that of *d* 6″, and weight *b* 100 lbs. Then if warp is drawn from *d* until its radius becomes 5″, a weight of 6 : 5 : : 100 : 83·3 lbs. must be used to maintain an equal tension. Clarke's appliance slightly modified is found on $\frac{9}{10}$ of the cotton looms at present working in this country.

One of the principal alterations has been adopted to prevent weights, applied in the manner described above, from settling upon the floor when used in a machine subjected to the shocks and vibrations that are common in a power-loom. It consists in removing balance weights, and fastening the inner ends of ropes, or chains, upon hooks in the framing, if stout fabrics are required, or upon flat springs similarly situated, for light goods, and their outer ends to weighted levers, either simple or compound; but this renders a beam less sensitive to movement in the shedding harness, and less capable of taking back any excess of warp pulled from the beam than where balance weights are used.

There are many points that require careful attention to cause a letting-off motion to work satisfactorily; of these the beam is of great importance. It is sometimes made of cast or wrought iron, but more frequently of wood; of the latter there are two varieties, viz. solid and built; in both dry sound timber not liable to warp should be used. An iron hoop is inserted into each end of a solid beam to prevent splitting, when bearded gudgeons, about 1″ square in section, are driven in. Beam and gudgeons are then turned to a uniform diameter; the former varying from 5″ to 6″, and the latter from $\frac{7}{8}''$ to $1\frac{1}{4}''$. A built beam is considered superior to a solid one, because its gudgeon passes entirely through the beam, and warping is consequently a rare occurrence.

Digitized by Google

Cast-iron ruffles are required to prevent ropes and chains from channelling the beam and thus rendering it useless; they are occasionally turned to provide a smooth surface, but are often employed as they leave the moulding sand; in any event, they must be smooth enough to allow ropes or chains to slip regularly.

Iron or steel flanges are fixed upon all beams intended for use in power-looms, to permit warps of great length to be wound on without fear of the outside threads slipping or becoming entangled.

Each warp beam is supported in brackets bolted to the loom framing; it must be parallel with back rest, breast beam, and taking-up roller, and the warp wound upon it with an even tension, or faulty cloth will be made. No definite rule can be given for weighting, nor for the length of warp exposed between beam and harness; both vary with circumstances; still, it may be taken as a general rule that warp should be held as tight as its strength will allow without giving the fabric a harsh feel or breaking the threads, else if weight is insufficient the fabric is apt to have a raw appearance. Too much or too little warp may be subjected to the pulling action of healds; in either case unnecessary wear and tear results; in the former, because it is pulled too frequently before being woven into the piece; in the latter, because too great a tax is put upon its elasticity. From 20″ to 24″ is enough for certain looms, but 36″ to 40″ is not an uncommon length in heavy looms.

Chains possess advantages over ropes for weighting many cotton warps in respect to more regular tension, and also as to the cost of keeping them in a fit working state. The latter is an important consideration to a manufacturer, for ropes cost from 1s. to 6s. or even 8s. per annum per loom. The amount of friction produced by coiling ropes round

Digitized by Google

beam ruffles depends largely upon their condition. New ones possess far greater holding powers than old ones; and when made from different fibrous materials, they exert a varying frictional drag; the condition of a ruffle also affects the tension put upon a warp; but if a given rope is coiled round a beam, and has weight and counter attached to opposite ends, by doubling the weight of counter twice as much weight will be needed at the heavy end to maintain an equal pull; or, in other words, "friction is proportional to load."

A great difference will, however, be observed if an alteration is made in the number of coils of rope upon a ruffle; thus if a rope is twisted once round a beam and weighted, a 1 lb. counter will be slowly pulled up by a 3 lb. weight on the other end; if the rope is lapped twice round, nearly 9 lbs. will be required to elevate the counter, with three laps about 27 lbs. will be needed, and with four laps approximately 81 lbs. will be necessary to perform the work. This is equal to the first, second, third, and fourth powers of the coils, or $1 = 3^1$, $2 = 3^2$, $3 = 3^3$, $4 = 3^4$.

Perry, in his *Practical Mechanics*, gives the following results of actual tests with a 1 lb. counter-weight:—

Laps of Rope on Ruffle.	Weight in lbs. required to slowly raise the Counter.
½	1·6
¾	2·1
1	3·0
1¼	4·0
1½	5·1
1¾	6·6
2	8·0
2¼	10·0
2½	14·0
2¾	20·0
3	23·0
3¼	30·0

Digitized by Google

The table shows a divergence from theory, but it is sufficiently accurate to demonstrate the utility of the rule given above.

There is a point beyond which additional laps will not produce a beneficial effect in a loom, and it is reached when further slipping becomes impossible, for the weights are then wound up and the counters sink to the floor. With one end of a rope fixed to the framing winding up of weights must cause slack rope to be given off at the inside, and to some extent this induces slipping, but of so irregular a nature as to be absolutely useless to a weaver.

Handy and simple as the rope and lever motion is, it is essentially unmechanical, and can only be considered as a makeshift for a let-off. When tested by the conditions stated on p. 365, it is found to be incapable of maintaining an equal tension, where sheds are opened and closed, or at different parts of the warp. An attempt is, however, made to approximate to a uniform tension during shedding by employing a vibrator which moves in to slacken warp as a shed opens, and out to tighten it as a shed closes, but the maintenance of a fixed pull from one end of a warp to the other is left entirely with the weaver who reduces the weight as the diameter of the warp beam diminishes.

The second condition is not met in any way, for instead of warp being delivered positively, it is simply pulled from the beam as required by the shedding, beating-up, and taking-up motions. Still, faulty as this part of the contrivance undoubtedly is, here is its strongest point, for warp can be paid off and taken back as a shed opens and closes.

The third requirement is admirably met, because nothing capable of doing the work can be simpler or less liable to require an overlooker's attention when once adjusted.

Digitized by Google

Of the so-called positive let-off motions some merely give automatic weighting without attempting to pay off warp regularly. Others deliver warp positively, and then by hanging dead weights upon it after it leaves the beam a fixed tension is maintained; most of these are a combination of positive and negative parts working in conjunction, but without direct connection with the taking-up motion.

Others, again, may be defined as self-contained motions for letting off warp and drawing away cloth positively.

From the large number of inventions in the market it is

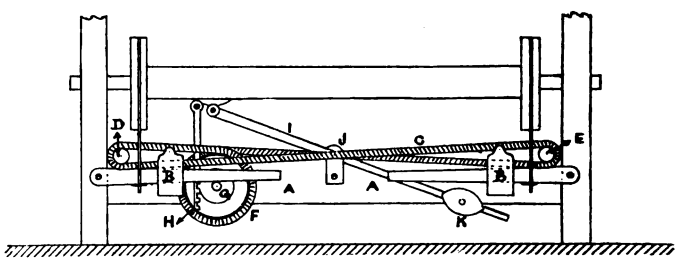

FIG. 206.

only possible to select one, or at most two, from each class; still, if they fairly represent the different principles involved, a good general knowledge may be obtained, and the study of minor alterations can be safely left to the student.

Charles Schilling of New York claims to be the inventor of a motion belonging to the first-named class. He uses ordinary weights and levers *b*, *a* (Fig. 206), but fastens the weights to an endless rope *c*, that passes over guide pulleys *d*, *e*, fixed upon the framing, and also round rope wheel *f*. Compounded with *f* is a pinion *g*, the teeth of which gear with those of rack *h* suspended from the top of presser lever *i*. The fulcrum of *i* is at *j*, and a weight at *k*. Above

Digitized by Google

rack *h* a presser acts against the under side of the warp, and as the latter is drawn away the presser rises, pulls up rack *h*, moves pinion *g*, wheel *f*, rope *c*, and weights *b*. It will be noticed that as rope *c* is crossed, any movement imparted to it will carry each weight *b* towards the fulcrum pin of its own lever, and thus the weight upon the warp beam is diminished in proportion as the diameter of

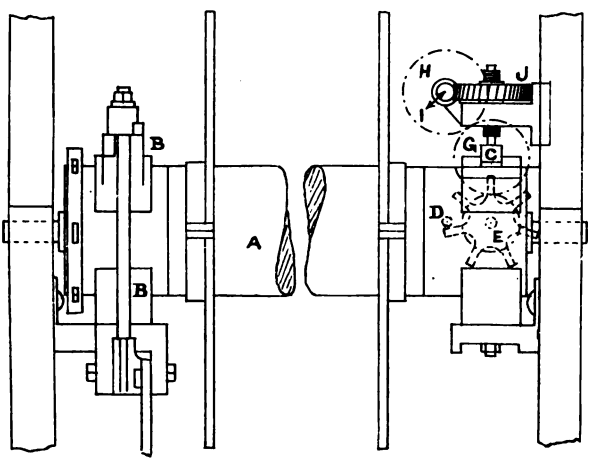

FIG. 207.

the beam decreases. This motion is not unduly complicated, nor is it difficult to adjust; when a new warp is put in, it is only necessary to force the presser down and the weights will move to their proper places. If required, the weights can be removed during weaving, but they must be put back in the same places. Its defects are: that the warp is not delivered, but pulled off; that the presser prevents the beam from readily taking back any excess of warp drawn away; that no attempt is made to maintain an even tension during shedding; that the form of the presser is more liable to

Digitized by Google

glaze the warp, and to cause the surface of the beam to be irregular than if a simple roller, extending from flange to flange, was used.

Messrs. Hanson and Crabtree patented another automatic weighting motion, consisting of a beam *a* (Figs. 207 and 208), resting in leather-covered journals *b*, *b*. The upper journal is pressed against the iron hoop of beam *a* by means of a flat spring *c* to give the necessary pressure, a portion of which is taken off every time the beam revolves by a peg *d*, screwed into the beam hoop, that comes into contact with star wheel *e*, and moves it one tooth, thus setting in motion wheels *f*, *g*, *h*, worm *i*, worm wheel *j*, and causing screw *k* to ascend and slightly reduce the compressing force of *c* upon *b*.

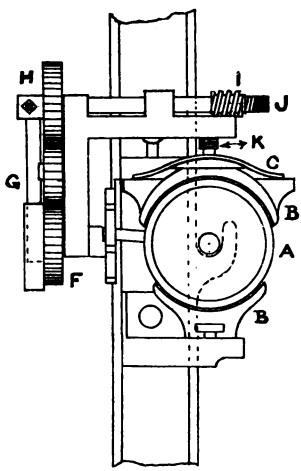

FIG. 208.

A motion belonging to the second class, as made by Smith Brothers of Heywood, consists of worm wheel *a* (Figs. 209 and 210), which is fixed on one end of the warp beam and gears with worm *b*; the latter is secured to the bottom of a short vertical shaft, and ratchet wheel *c* is secured to the top. This shaft also serves as a fulcrum for a bell-crank, or letting-off lever, on arm *d* of which pawl *e* is hinged, and takes into the teeth of *c*. A spiral spring, hooked into *d*, and also into a bracket on the framing, keeps the lever in one position when not otherwise controlled. An end of rod *g* is fastened to a slay sword by a stud, the

Digitized by Google

other is slotted, furnished with an adjusting screw, and by means of a second stud is held against the under side of arm *f* of the letting-off lever, so that, at each forward stroke of the slay, arm *f* is pulled far enough to allow pawl *e* to take a tooth in wheel *c* and drive the warp beam by

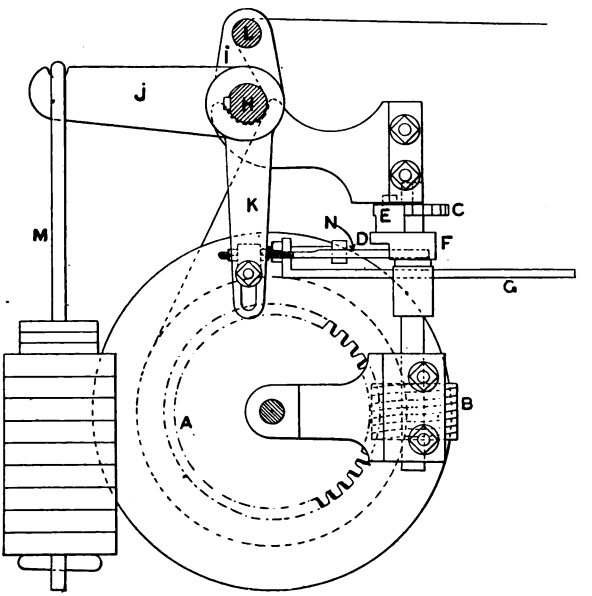

FIG. 209.

worm *b*. But it is obvious that a tooth taken when a beam is full will deliver more warp than when the beam is nearly empty; for this reason negative parts are added to regulate the supply; these are: shaft *h*, vibrating in bearings and carrying a three-armed lever *i*, *j*, *k*, near one extremity, and a two-armed lever near the other, *i* supports a warp roller *l* at its upper end, *j* a heavily weighted stalk *m*, and *k* carries a slotted rod *n*, which is connected by a stud to the

Digitized by Google

upper surface of arm *f* of the bell-crank lever. Rod *n* slides on *f* until the inner end of its slot comes into contact with the stud, where *f* is practically locked.

The warp passes inside shaft *h*, over vibrator *l*, and forward to harness and fabric; at the same time the weights upon stalks *m* keep it under a constant tension.

Ratchet *c*, if moved one tooth for each revolution of the crank, would deliver considerably more warp than the taking-up roller requires; when this occurs, the vibrator roller *l*

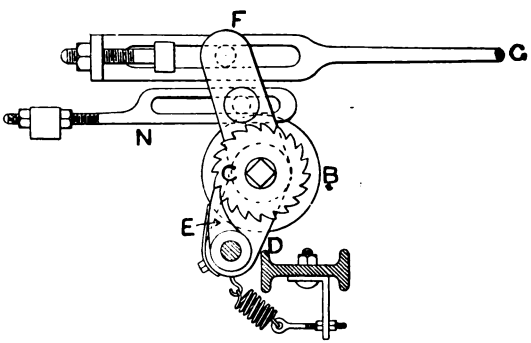

FIG. 210.

is pulled back by the weights on *m*, and in falling back rod *n* is pushed forward by arm *k* until the stud in *f* touches the end of slot in *n*; then, owing to the spiral spring being unable to draw back pawl *e* far enough to drop over the next tooth in ratchet *c*, letting-off is suspended.

The motion is fairly satisfactory for heavy work, but a greater strain is put upon yarn in an open than in a closed shed.

In 1883 Keighley of Burnley contrived a self-contained let-off motion, in which the beam is only weighted to prevent warp from becoming entangled by unwinding too

Digitized by Google

freely. After warp leaves the beam it passes over a heavy, cloth-covered presser roller *a* (Fig. 211), and under and nearly round a measuring roller *b*, having exactly the same circumference as the taking-up roller, viz. 15″, thence over vibrating bar *c*, and forward in the usual manner to the cloth roller. The centre of roller *a* is placed higher than those of roller *b* and pulley *c′*, to allow the former to gravitate towards *b*, and thus, by their nip, to prevent the warp from slipping.

All the parts of Keighley's motion are driven by worm *d*, which is set-screwed on the end of the bottom shaft, and is in contact with a wheel *e* secured to a short horizontal clutch shaft. Slightly in advance of *e* bracket *f* carries a flattened projection into contact with one of ten teeth on the side of clutch disc *g*; the latter slides upon a key-way whenever the loom stops, and letting-off and taking-up are disengaged in the following manner:—*g* is traversed laterally upon its shaft by the oscillation of lever *s* on fulcrum *t*, and by a pin *u* entering the ring groove in clutch *g*. A rod *v* connects *s* with a three-armed lever *w*, having a horizontal arm fixed to touch spring handle *y* and a hinge at *x*, so that by turning it up to the perpendicular, the loom may be set in motion without delivering warp, or drawing cloth forward; but if left horizontal when *y* is shifted to the retaining notch, *g* slides into contact with *f*, and all parts of the machine act. If the weft breaks, cracks are prevented by the loom starting in advance of the clutch; this is owing to the time taken by *f* in moving from tooth to tooth in *g*—say, on an average from 2 to 3 picks. A protruding piece 4 on *s* passes beneath a weighted lever *z* and invariably elevates it with *s*, but *z* is free to rise alone; *z* carries brake clog 1 at its inner end and is connected by rod 2 to a lever 3, shown resting upon weft fork lever 5,

Digitized by Google

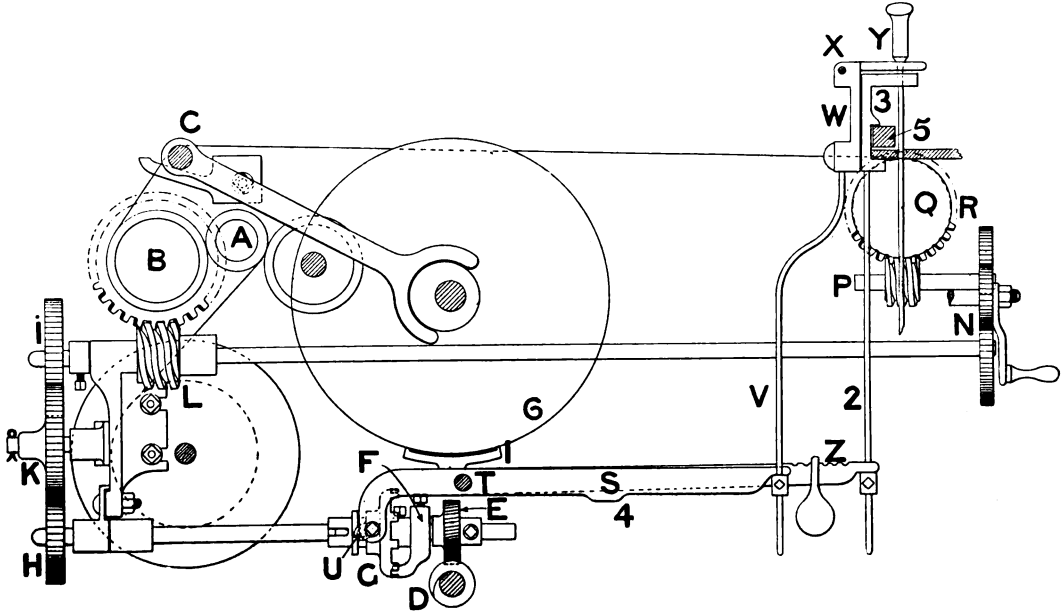

Fig. 211.

Digitized by Google

hence, when y is moved outward, z rises with 2, and clog 1 leaves the periphery of fly wheel 6; the opposite movement of y brakes the loom. Measuring roller b is driven from the clutch shaft by wheel h, which should contain 15 teeth if the teeth in wheel i are to equal the number of picks per $\frac{1}{4}$ inch; 30 teeth if they equal picks per $\frac{1}{2}$ inch; 45 teeth for picks per $\frac{3}{4}$ inch; and 60 teeth for picks per inch. Wheel i is thus seen to be the one to change when alterations are to be made in the number of picks; it is attached to the rear end of a side shaft and is driven by carrier k. A worm l drives measuring roller b, and another wheel on the forward end of the same shaft drives through a carrier n, the taking-up roller wheel, which contains 100 teeth; the latter is fixed upon a short shaft p, revolving below and at right angles to the taking-up roller q, it is compounded with a worm which takes into the teeth of worm wheel r on q.

It is well known that more than a yard of warp is required to weave one yard of cloth, but the exact amount varies with the weave, the thickness and closeness of warp and weft. Although it may be possible to ascertain by calculation the allowance for contraction, yet in practice it is a matter which is determined by experience.

Assuming the percentage of warp-contraction has been obtained, the side shaft wheel must have one tooth less for every per cent of contraction than the taking-up wheel.

The parts described above secure regular delivery of warp; it now remains to be seen what provision is made for maintaining a constant and regular tension whether a shed is open or closed; this consists in making the outlines of shedding and vibrator tappets exactly similar, but differing in throw. After making the following experiment, the

Digitized by Google

writer is of opinion that the inventor has succeeded in his attempt :—

A thread was passed between the pressing and measuring rollers, over the vibrator, through healds and reed, and a light weight was attached to the forward end and permitted to hang loosely over the taking-up roller, the healds were moved up and down, and it was found that the weight remained stationary. The chief fault of this motion appears to consist in the number of parts added and in the trouble entailed in gaiting a new warp.

One serious objection to positive motions is that an increase of moisture in the atmosphere causes warp threads to contract in length, and since they are held perfectly rigid by the cloth and warp beams, the tensile strain put upon them is often sufficient to pull fibre from fibre, if the loom is left stationary for any considerable time, and a large number of breakages occur before the warp thus exposed can be woven up.

PART XIX

TAKING-UP MOTIONS

In weaving by power, some means must be adopted to draw the fabric forward regularly as it is woven, else it would be impossible to produce goods having any approach to perfection.

Such a motion does not present any exceptional mechanical difficulties; on the contrary, parts were added to what was little more than an experimental loom which perfected the principle, at least half a century before the power-loom became a commercial success. The parts

Digitized by Google

employed were two rollers pressed tightly together and driven at a constant speed, the fabric passed partly round and between them, and was by this means drawn away at the required rate. But the foregoing is only a partial statement of the functions of parts required to govern the movement of cloth. It is of the utmost importance that uniformity shall be maintained; and since after unweaving, and after weft has given out, the fabric must be let back, some efficient means of determining the extent of such movement is necessary. Or, in other words, some method of accurately fixing the position of the cloth fell is still a desideratum, for at the present time no satisfactory solution has been reached.

To-day there are two classes of taking-up motions, known respectively as "positive" and "negative." The former may be subdivided into: (1) intermittents; *a*, that take up as the slay falls back; *b*, that take up as the slay moves forward; *c*, those where a driving wheel is changed; and *d*, those where a driven wheel is changed. (2) continuous; in this case the gearing is such that cloth is constantly drawn away if the loom is in motion.

Of negatives, there are those that are self-contained, and those that act in conjunction with a loose reed.

If a positive motion implies the use of parts where nothing is left to chance, then the one in most extensive use will by no means stand the test, for the cloth passes partly round a wooden roller, having, as a rule, its surface covered with a strip of thin metal which is first punched full of small holes to roughen one side, and is then wound spirally upon the roller, with the rough side exposed. Occasionally an iron roller is grooved longitudinally and transversely to give roughness; but sand, emery, and pins driven into a leather foundation, are all used for the same

Digitized by Google

purpose—namely, to create friction, and so enable the roller to grip a fabric firmly and draw it forward. The bearings of beam *a* (Fig. 212) are in the end framing, and so placed that the periphery of *a* partly projects beyond the front edge of the breast beam; it is also parallel with the latter, with the harness, and the back rest.

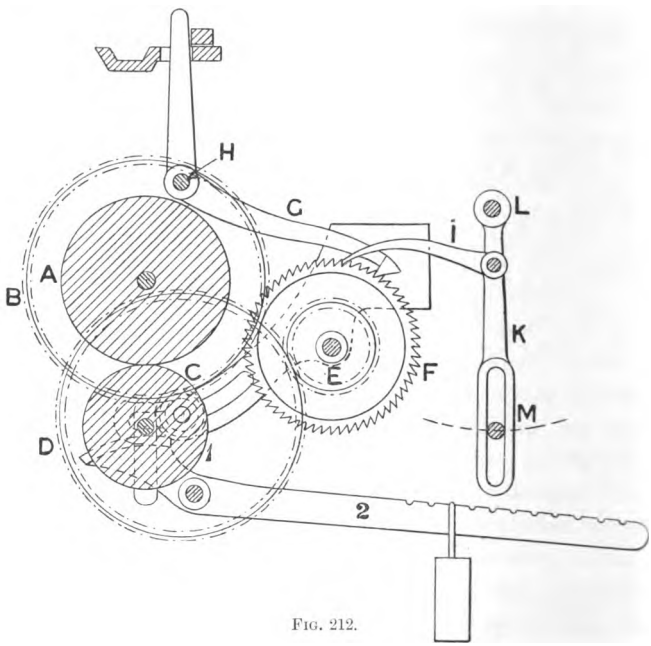

FIG. 212.

Beam wheel *b* is set-screwed on one end of the beam shaft; its teeth gear with those of stud pinion *c*, and the latter is compounded with stud wheel *d*, both so named because they work loosely upon a short adjusting stud that passes through and is bolted to a slotted bracket, the slot being concentric with beam *a*. Wheel *d* gears with change pinion

Digitized by Google

e, and upon the same short shaft ratchet *f* is fixed. Two pawls or catches *g*, *i* rest freely upon the surface of *f*; *g* is simply a holding catch to prevent the ratchet wheel turning in both directions; it is keyed upon a rod *h*, extending across the loom, *h* carries at its extremity farthest from *g* a finger that presses against the weft fork lever; the effect of this contrivance is to lift catch *g* above the teeth of *f* when weft breaks, and thus prevent taking-up. A driving or pushing catch *i* is pivoted on lever *k*; the latter oscillates on centre *l*, and a slot in its lower arm allows stud *m* to be passed through. As *m* is bolted to the slay sword, and adjustable, it follows that a swinging motion will be given to *k*, and catch *i* will drive ratchet *f* forward, *f* in turn will set the entire train of wheels in motion. The extent of motion in a ratchet wheel depends upon the position of stud *m* in the slotted lever.

This is an intermittent motion, for it only draws cloth forward when the slay is moving back; but by altering the form of catch its action will be to pull, instead of push, the ratchet wheel round, and cloth will then be taken up as the slay moves forward. In either case the pawl is the weak point of this motion, and irregularities are by no means uncommon, owing to its defective action. The catch often slips over a tooth; it may take two teeth, or it may not be strong enough to take them regularly.

A thin wooden roller 1 is pressed against the under side of *a* by two balance levers 2 acting at opposite ends of its gudgeons; they are supported on studs bolted to the framing and loaded at their lower ends; hence *a* drives 1 by surface contact and winds on the cloth negatively.

A taking-up motion requires to be so set that a pushing catch shall drop over a tooth of ratchet *f* when the cranks are on the front centres, and to take one tooth at each movement;

Digitized by Google

if more than one tooth is taken, stud *m* must be lowered; if less than one, it must be raised. Holding catch *g* should clear a tooth by about $\frac{1}{8}''$ when the cranks are on the back centres.

A pulling catch will consume less power in drawing a fabric forward than a pushing catch, and it is less liable to slip, because taking-up is performed as the cranks move from the top towards the front centres; at which time a shed is either closed or only partially open; whereas a pushing catch acts as the cranks move from the front to the bottom centres; or when a shed is quite open and the strain greatest.

Set a pulling catch to drop over a tooth with the cranks on the back centres, and to take one tooth at each forward stroke of the slay, then fix the holding catch to clear a tooth about $\frac{1}{8}''$, with the cranks at the front centres.

Picks are placed closer together in one fabric than in another, hence the taking-up beam must be made to rotate correspondingly slower or faster; this is done by making changes in the number of teeth in one wheel of the train, that wheel being generally the change pinion *e*.

The selection of suitable wheels is a simple matter, especially if it is first clearly understood that, irrespective of their form or position, wheels are drivers, driven, or carriers. A driver is one that increases velocity in proportion to its increased diameter or teeth; a driven is one that decreases velocity in inverse proportion to its increased diameter or teeth; and a carrier merely conveys motion from one part of a machine to another without altering the value of a train; such a wheel invariably works loosely and independently upon a stud or shaft.

To find the number of teeth in any change pinion for a given number of picks per $\frac{1}{4}$ inch, multiply the teeth in all

Digitized by Google

driven wheels together, and divide by the teeth in driving wheel, multiplied by the number of $\frac{1}{4}$ inches in the circumference of taking-up roller, and by the required picks per $\frac{1}{4}$ inch, or $\frac{b \times d \times f}{c \times a \times \text{picks}} = \text{pinion required.}$ If change pinions are required to give 16 picks per $\frac{1}{4}$ inch with trains 1, 2, the former consisting of beam wheel of 75, stud pinion 15, stud wheel 120, and ratchet 50 teeth respectively, together with a roller 15″ in circumference, train 2 has a beam wheel of 75, stud pinion 12, stud wheel 100, ratchet 50 teeth respectively, and beam 15″ in circumference.

$$1 = \frac{75 \times 120 \times 50}{15 \times 60 \times 16} = 31{\cdot}25 \text{ teeth required.}$$

$$2 = \frac{75 \times 100 \times 50}{12 \times 60 \times 16} = 32{\cdot}55 \text{ teeth required.}$$

Only whole numbers can be used, therefore 1 requires 31, and 2 either 32 or 33 teeth. In practice, however, it has been found that cloth contracts in length between the loom and the counter, and it is usual to add $1\frac{1}{2}\%$ to the calculated teeth in a pinion for this purpose; thus $31{\cdot}25 + 1\frac{1}{2}\% =$ say 32 teeth, and $32{\cdot}55 + 1\frac{1}{2}\% =$ say 33 teeth in the wheels to be used.

Where a large number of looms similar in make are placed in the same mill, calculations are shortened in various ways; frequently by finding a constant number, which, divided by the picks required, will give the teeth in pinion.

The constant for train $1 = \frac{75 \times 120 \times 50}{15 \times 60} + 1\frac{1}{2}\% = 507.$

" " $2 = \frac{75 \times 100 \times 50}{12 \times 60} + 1\frac{1}{2}\% = 528.$

Digitized by Google

$$\text{Then to find a pinion for 16 picks } 1 = \frac{507}{16} = 32$$

$$\text{and } 2 = \frac{528}{16} = 33 \text{ teeth.}$$

Inverse proportion may also be used to find the number of teeth in a pinion; thus if a 33 pinion gives 16 picks, what wheel will give 20 picks? 20 : 16 : : 33 : 26, the number required.

Simple as changing a driving wheel is, it involves unnecessary risk and trouble—risk of putting the wrong wheel on, trouble in making the calculation.

Many minor variations from the above-described motion are to be met with; for instance, it may be found that an alteration of one tooth in a pinion will make too great a change in the fabric. In such cases it is not uncommon to employ a train of 7 instead of 5 wheels.

A driven wheel may be changed instead of a driver, and when this is done calculations are seldom required, as such wheels are selected for the train that the number of teeth in a change wheel corresponds with the number of picks per inch in the fabric; thus, ratchet 24, first pinion 36 (the first stud wheel is the change wheel), second pinion 24, second stud wheel 89, third pinion 15, beam wheel 90 teeth respectively, and cloth roller 15·05″ diameter.

$$\frac{24 \times 89 \times 90}{36 \times 24 \times 15 \times 15{\cdot}05} = \frac{89}{90{\cdot}3}, \text{ but } 89 + 1\tfrac{1}{2}\,\% = 90{\cdot}3 \therefore$$

teeth in change wheel equal picks per inch. If the wheel of 36 teeth is replaced by one of 27 teeth, a change wheel equals picks per $\frac{3}{4}$ inch; if by 18 teeth, a change wheel equals picks per $\frac{1}{2}$ inch; and if by 9 teeth, a change wheel equals picks per $\frac{1}{4}$ inch. The number of teeth in each

Digitized by Google

being clearly stamped upon its surface, mistakes are not of frequent occurrence (see also Keighley's positive let-off and take-up motions, pp. 376-380).

The main difference between intermittent and continuous motions is found in the manner of driving. In the latter a side shaft *a* (Figs. 213 and 214), inclined to the floor line, is fixed at right angles to picking shaft *b*, and gives motion to the fabric by means of bevels *c*, *d*, worm *e*, worm wheel *f*, change pinion *g*, stud wheel *h*, stud pinion *k*, beam wheel *l*,

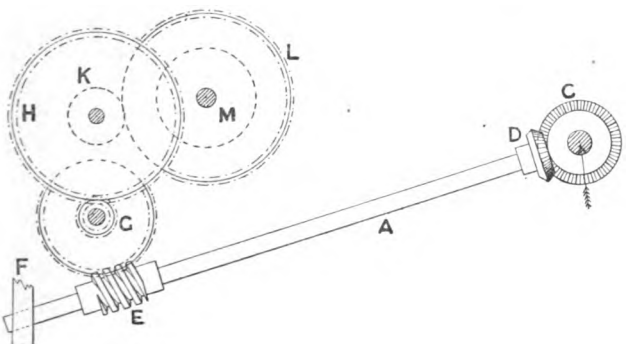

FIG. 213.

and beam *m*. The velocity of such motion depending in this, as in other applications, entirely upon the wheels employed. It is essentially positive in action, as slipping is next to impossible, and nothing is left to chance; it also possesses other advantages; for instance, if a loom is turned backwards the cloth is moved back with it; but in intermittents the pawl continues to act in the same manner, irrespective of the direction of other parts of a loom; the consequence being that cloth is frequently drawn forward when weft is absent, and cracks are produced, unless the weaver disengages the taking-up wheels,

Digitized by Google

and thus lets back the fabric before recommencing to weave.

Negative or drag motions do not all act alike; still in most of them the warp is held tight until the fabric, pushed forward by the reed, pulls warp from the beam; in doing which, the fabric is slackened, and a weighted lever and pawl act upon a ratchet wheel to draw the fabric forward without employing change wheels; but close at-

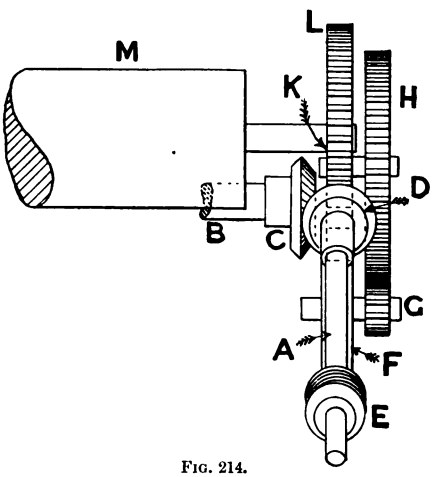

FIG. 214.

tention must be bestowed by the weaver upon the relative weighting of warp beam, and weighted lever, or the decreasing diameter of warp, and the increasing diameter of cloth roller, will cause the fabric to be drawn away irregularly. They are chiefly employed for fabrics that would be injured by coming in contact with a roughened roller, or where weft is so irregular in thickness that a fabric made with it would be full of uneven places if drawn away positively.

Digitized by Google

As these motions wind the fabric upon the taking-up roller, there is no probability of picks being pushed out

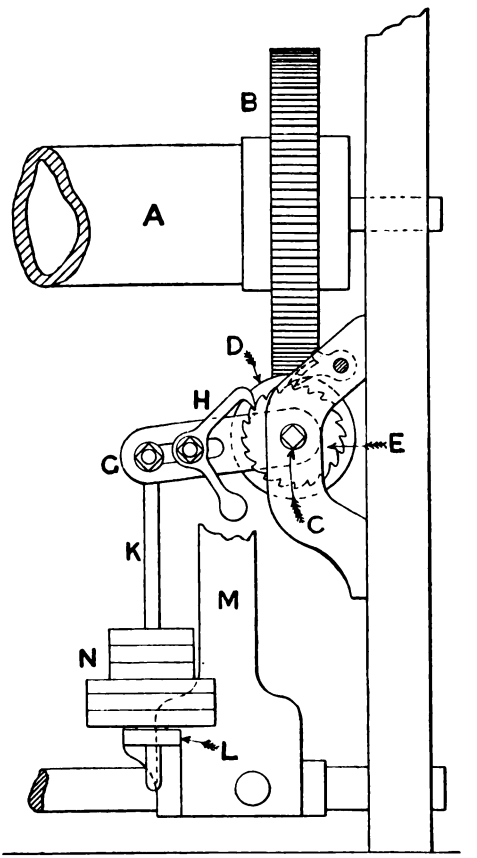

FIG. 215.

of their appointed places; again, as thickness of weft alone controls the taking-up, fabrics of uniform bulk are

Digitized by Google

produced, and letting-back is unnecessary when weft breaks. They are, however, more difficult to set for open

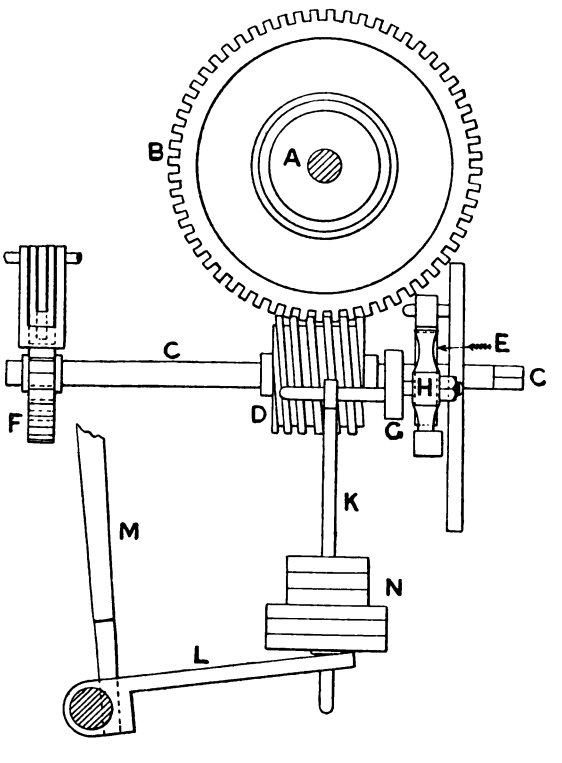

FIG. 216.

than for heavy fabrics, and the difficulty increases in proportion to lightness.

As applied to fustian and velvet looms the parts consist of a cloth roller *a* (Figs. 215 and 216), upon which the fabric is wound, and to which a worm wheel *b* is fixed. A short

Digitized by Google

shaft *c* carries a worm *d*, that gears with *b*, and two ratchet wheels *e*, *f*, both having compound holding catches; at *e* consisting of two, and at *f* of three, all slightly differing in length. Shaft *c* serves as a fulcrum to a slotted lever *g*; upon the latter are a stud, to hold the pulling catch *h*, and a pendent stalk *k*, loosely jointed near its forward end; slightly above the base of *k*, a collar is placed to rest upon a slotted arm *l*, projecting from a slay sword *m*; the lower portion of *k* passes through the slot, and its collar permits the stalk to be loaded with adjustable weights *n*, for the purpose of pulling ratchet *e* forward by catch *h*. When the loom is in motion the slay's vibrations are transferred to arm *l*, which lifts stalk *k*, lever *g*, and catch *h*; the latter, hooking on a tooth of ratchet *e*, keeps the other parts named suspended, until the reed, acting upon the accumulating weft, slackens the fabric sufficiently to enable the weights upon *k* to overcome any remaining resistance and pull ratchet *e* forward, then holding catches on *e*, *f* prevent any backward movement. To increase the number of picks per inch weight must be taken from *k*, and to reduce them it must be added. In either case the exact alteration is made by trial.

In silk looms it is a common practice to control the taking-up motion by a loose reed that swivels from a pin in the cap end; it is kept vertical by board *b* (Fig. 217) and spring *c*, the latter presses one arm of lever *d* constantly against *b*. Points *e*, *f* on *d* are respectively fulcrum pin, and an adjusting piece with a T-shaped head. All the above-named parts are attached to and swing with the slay.

Immediately in front of *f* a lever *g* is moved upon a pin at *g'*, and connected at *g* to catch *h*, shown resting upon the teeth of ratchet 1, which, being compounded with 2, drive another pair of compounded wheels 3, 4, and 4 gears

Digitized by Google

with 5 fixed upon the shaft of a taking-up roller, one yard in circumference.

It will be noticed that cloth can only be drawn forward

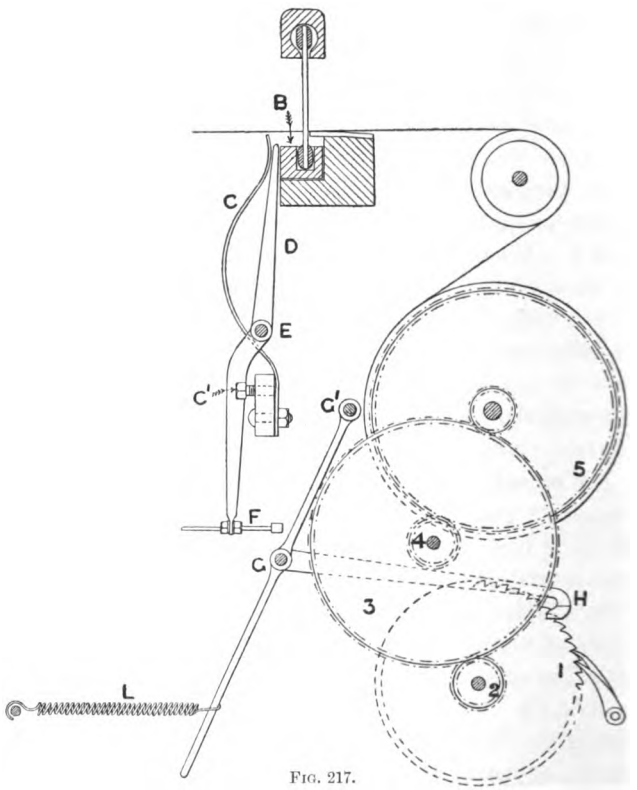

FIG. 217.

when the reed is pushed back, for at such times head *f* forces catch *h* to advance, but as *f* moves back a helical spring *l* contracts, pulls *h* forward, and sets the train in motion.

Digitized by Google

To increase the number of picks spring *c* must be tightened, and to diminish them it must be slackened, by suitably moving set-screw *c'*.

PART XX

BOX MOTIONS

Several attempts were made to adapt the power-loom to the production of checked and other fabrics requiring more than one shuttle before a successful motion was obtained.

Dr. Cartwright used a flat tray divided into compartments, each large enough to hold a shuttle, and he contrived, by pushing and pulling it automatically, to move the proper shuttle in line with the picker.

Another inventor placed a series of shuttles inside the segment of a circle, which was pivoted above the shuttle race and capable of a swinging motion that carried any shuttle into position.

A third inverted the above by fixing the shuttle boxes outside the segment of a circle, and placing its fulcrum pin below the race board; but to-day all such methods have given place to two principles of governing shuttles known as "drop" and "revolving" boxes. The former was invented and applied to the hand-loom by Robert Kay of Bury in 1760, but Diggle, also of Bury, was the first to successfully apply it to the power-loom. The latter was invented by Luke Smith of Heywood in 1843. Both are now found in considerable variety of detail, but of the two, drop boxes are most varied.

The ever-increasing number of different box motions

Digitized by Google

proves conclusively that none of them quite meet manufacturers' requirements. Experience shows us that a good motion must be positive, and so connected with other parts of the loom as to ensure it acting as they act, and thus render it impossible for the boxes to get out of time or rotation with shedding and picking if a loom is turned back for unweaving, or any other purpose. Provision should be made for stopping the loom or motion, in case the picker is not clear of the boxes when a change is made; and if a box is not lifted to its proper position, else a positive movement will result in smashes. Any shuttle should be capable of being brought level with the picker at any time; and the motion imparted to boxes should be as easy as possible, or during the short time allowed for making changes vibration cannot be avoided, and this necessitates a reduced speed of loom. Again, it is undesirable that shuttles should be driven out of their boxes if a loom is turned backward, for it is both annoying and troublesome to a weaver to replace them before re-starting the loom.

If from these data we examine the motions in most extensive use, it will be found that each is wanting in one or another particular.

Negative Drop Boxes—Diggle's Chain

In 1845 Diggle patented a box motion that for efficiency and simplicity had no rival; it at once became a great favourite, and held its place for many years, but is now being slowly pushed out by more modern appliances; nevertheless, it will probably long continue in use on heavy, slow-running looms, and also on those of medium weight and speed where not more than two shuttles are required.

Digitized by Google

The details have been modified in various ways to fit it for special purposes, but, as generally applied to looms

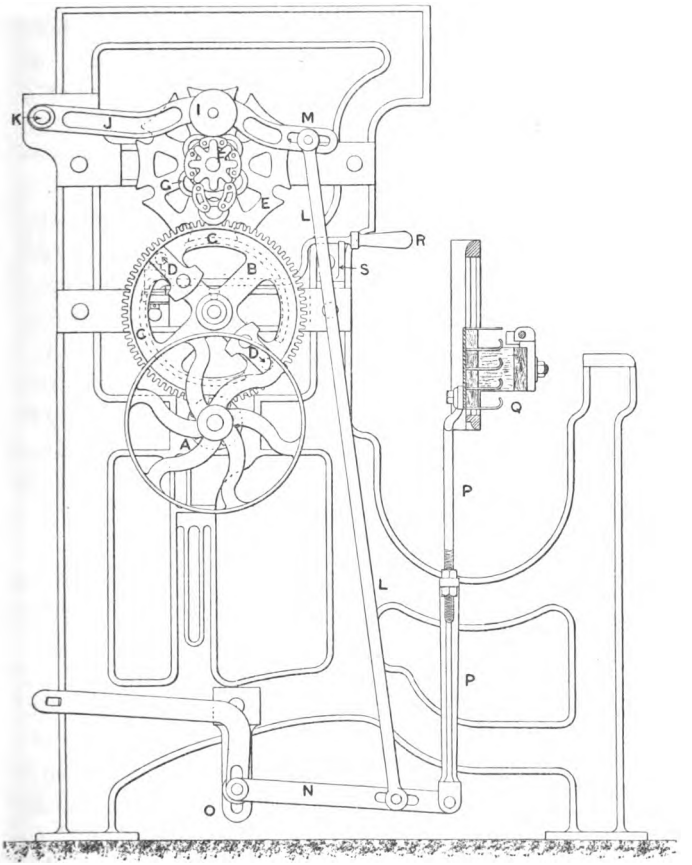

FIG. 218.

furnished with two or more boxes at one end, it remains essentially as Diggle left it.

Digitized by Google

In Figs. 218 and 219 motion is obtained from a pinion wheel *a*, keyed near the extremity of the crank shaft, which drives a slide wheel *b*, containing four times as many teeth as *a*; thus if *a* = 20 teeth, then *b* = 80 teeth. Upon the inner side of *b* a flange or slide *c* is cast concentric with the periphery, but broken at two points exactly opposite each other, and from the centre of each break a stud *d* projects. The slide serves the purpose of holding an eight-sided star wheel *e* stationary, and the studs give it an intermittent motion, by taking into one of the notches and causing it to make $\frac{1}{8}$ of a revolution every second pick. Star *e* is supported on a stud in the end framing, and has fixed at its centre an eight-sided chain barrel *f*, round which an endless chain *g* is passed; the latter is composed of links of varying thickness, the thinnest being thick enough to bring the top shuttle in line with the picker, and the others are thickened to bring

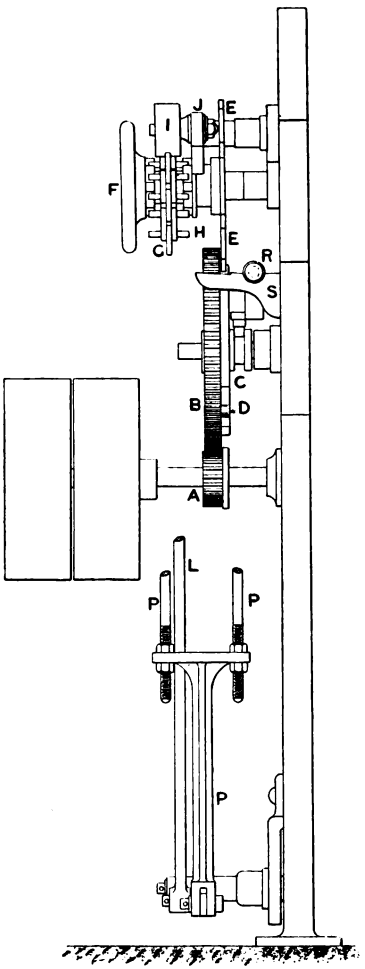

FIG. 219.

Digitized by Google

any remaining shuttle of the series into the same position at the proper time. The links equal $\frac{1}{8}$ of a revolution of barrel *f* in length, and are fastened together by pins *h*, each pushed through the holes in two links, and kept in position by split pins. All pins *h* project beyond the links, and fall into the notches of barrel *f;* by this means the chain is prevented from remaining stationary if motion is given to *f*.

Immediately above the barrel centre a bowl *i* revolves on a stud in lever *j*, and rests upon a link of chain *f*. Lever *j* is centred at *k*, and has rod *l* jointed to it at *m;* the lower end of *l* is attached to lever *n*, fulcrumed near the floor at *o*, and a spear rod *p* connects lever *n* and the shuttle boxes *q*. A thick link will elevate bowl *i*, and a thin one will allow it to fall, thus a vibrating motion is imparted to the shuttle boxes.

If for any purpose it is desirable to shift the boxes by hand, slide *b* must be taken out of gear with pinion *a;* this is instantly done by moving a lever *r*, mounted on a pin fixed to the frame; in *r* a stud is secured to take into a ring groove in the boss of slide *b*, and a notched bracket *s* holds *r* in its ordinary position.

Theoretically any shuttle can be instantly moved in line with the race board, but in practice not more than one box can be skipped in either direction, for the action being negative, the boxes fall by gravity, and the farther they fall the greater the rebound—a fatal defect in high speed looms.

The chain is ill adapted for long patterns; it is heavy, costly, and frequently becomes almost unmanageable.

Digitized by Google

Smith's Modification

In 1858 Mark Smith introduced a most important modification of Diggle's chain, which is an excellent arrangement for producing great variety and length of patterns with a short box chain, but does not touch other defects

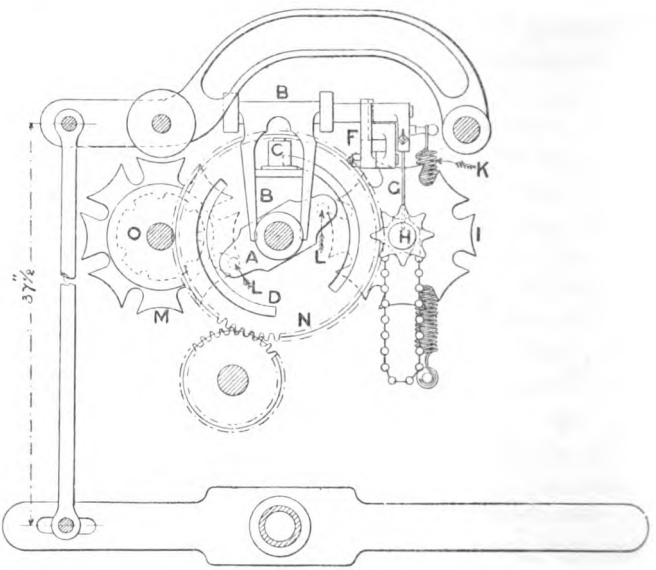

Fig. 220.

in the original motion. Smith retained every part of Diggle's invention, but added pieces to permit of a link remaining stationary until a change became necessary.

The parts added are a sliding block *a* (Figs. 220 and 221), fitted loosely on the slide wheel stud, but kept constantly rotating by pieces passing through holes in wheel *n* and entering grooves in its boss. The pieces so protruding

Digitized by Google

carry ordinary pins *l* for driving the star wheel *m*, and a sliding motion allows them to be withdrawn out of reach of the notches. It thus becomes a question of moving the chain barrel *o* frequently or at long intervals. This is done by a vertical lever *b*, forked at its lower extremity to take into a ring groove in the boss of *a*. Arm *b* is free to vibrate on a stud in the upper part of the framing, and has near its centre a bowl *c*, rolling against the face of a cam *d*, formed on one side of the slide wheel; *c* is thrust out by

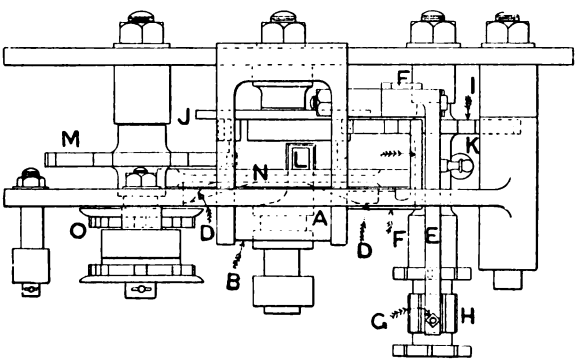

FIG. 221.

the full parts of *d*, and takes with it lever *b* and block *a*; but the chief object of cam *d* is to elevate a lever *e*, hinged at right angles to *b*, and connected to the latter by a link arrangement *f*, so as to take a vertical feeler *g*, fixed on the forward end of *e*, and immediately above an octagonal card barrel *h*, out of the way when *h* is to partially rotate. A second star wheel *i* is secured on the shaft of *h* to engage with a slide wheel *j*, that forms part of the principal slide wheel boss.

Wheel *i* is moved every pick in a pick and pick loom, but on alternate picks in a loom with boxes at one side

Digitized by Google

only, to place thin strips of perforated steel, called cards, successively under feeler *g*. A blank holds *f* up, and keeps the driving pins from the star wheel, but a hole permits it to fall, the pins *l* then engage with the star wheel *m*, and a change takes place in the boxes.

Spring *k*, attached to a pin in *e*, and also to a similar one in the framing, holds *g* in contact with a card on *h* when cam *d* is not acting to lift it.

Where a dobby or Jacquard is used as the shedding motion, it is seldom necessary to lay the chain of thin links; indeed, one at least of the most eminent firms of cotton manufacturers in this country does not use a separate chain of any description for moving shuttle boxes, but works all the changes from the shedding motion; this method has obviously many advantages, such as saving time in gaiting a loom and simplifying the weaver's task by reducing the number of parts requiring adjustment after unweaving.

A very common method of actuating Smith's mechanism is to substitute for star wheel *i* and barrel *h* a flat swivelling plate, upon the upper surface of which feeler *g* rests, then when a change is to be made in the boxes, a hook in the shedding motion lifts a cord attached to it and withdraws the plate, thus leaving feeler *g* free to fall. A spiral spring takes the plate back again.

Honegger's Drop Box

is the invention of a member of the well-known firm of Swiss loom-makers, but is now made in this country by several machinists. It is worked on similar lines to the Jacquard. In a 5 box loom, five long slotted hooks 1, 2, 3, 4, 5 (Fig. 222), are threaded upon a stud *b*, projecting

Digitized by Google

from the spear rod lever *c*, and each is governed by one of five needles *d*, the points of which project beyond a needle frame *e*. A four-sided cylinder *f* has a perforation

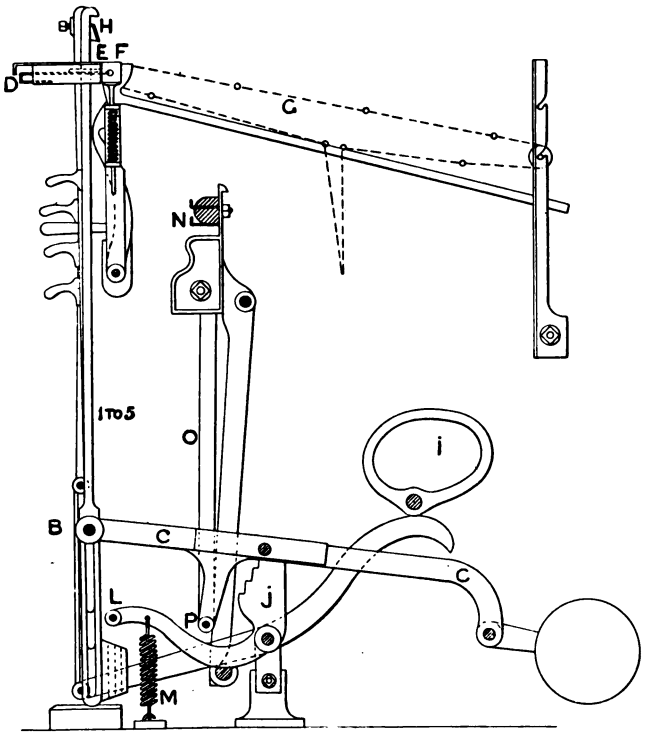

FIG. 222.

on each face for every needle, and a chain of paper or steel cards *g* is passed over it; *f* has two movements—a rotary and a horizontal one,—the former equals $\frac{1}{4}$ of a revolution on alternate picks, and the latter presses a card against the needle points; therefore if a blank place

Digitized by Google

is opposite a needle, it will push back the upper part of a hook, for stud *b* acts as the fulcrum.

A bar or griffe *h* is moved up and down once in two picks by a cam *i* on the bottom shaft, and through a space equal to a lift of four boxes; its upward motion commences immediately cylinder *f* has pushed back some of the needles; and in ascending it takes hold of all vertical hooks, but leaves all inclined ones. Connection is made with boxes *n* by rod *o* and stud *p*.

Hook 4 has simply a hole drilled in it large enough to receive stud *b*. Hooks 3, 2, 1, 5, have respectively slots equal to a lift of one, two, three, and four boxes; therefore when lifted 4 will place box five in position; 3, box four; 2, box three; and 1, box two. If all hooks are pushed back box one will be level with the race board. A stepped plate *j* and a spiral *m* lock the boxes when once they are lifted until a change is to be made, and then they are unlocked by a piece protruding from the bottom of a hook. Such pieces are varied in width, so that when lifted they will come into contact with bowl *l* on *j*, and push the latter back just far enough to permit the boxes to fall to the required level. The only purpose hook 5 serves is to place the top box level with the picker when a change has to be made by moving from bottom to top. This it does as it is provided with the broadest projection.

Honegger's motion has some of the faults of Diggle's: it is negative in action; the boxes fall by their own weight, and high speeds cannot be attained; but with paper or steel cards long pattern chains become possible.

Digitized by Google

Knowles's Chain

As elsewhere mentioned, the shedding, picking, and shuttle box mechanism of this loom is all connected and worked by similar parts. For a full description of which see Dobby Shedding, p. 113.

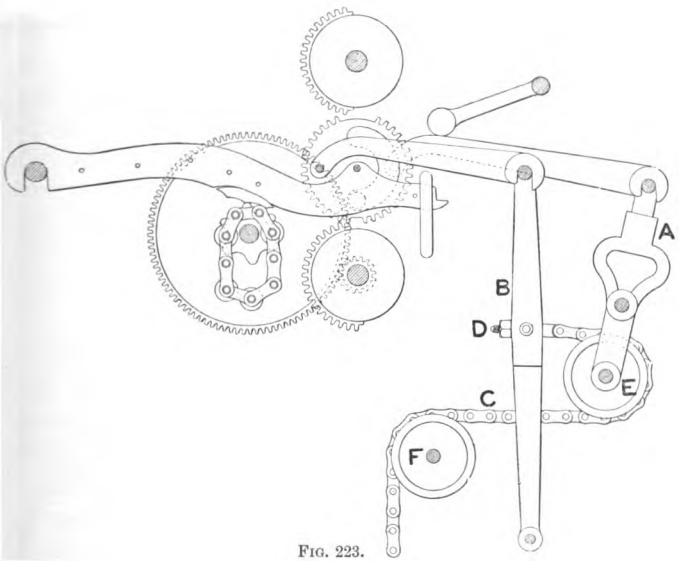

Fig. 223.

To move four boxes, two vibrator levers, gears, and connectors, precisely similar in form and action to those employed in shedding, are used. The connectors operate two levers *a*, *b* (Fig. 223): *a* being of the first order, and *b* of the second. A chain *c*, fixed to *b* at point *d*, passes round a flanged pulley *e*, which is suspended from *a*, over and under guide pulleys *f*, and thence to the shuttle boxes.

Digitized by Google

By relatively altering the positions of d, e it is possible to move any one of four shuttles to the picker.

In Fig. 224 gears a', b' are placed side by side

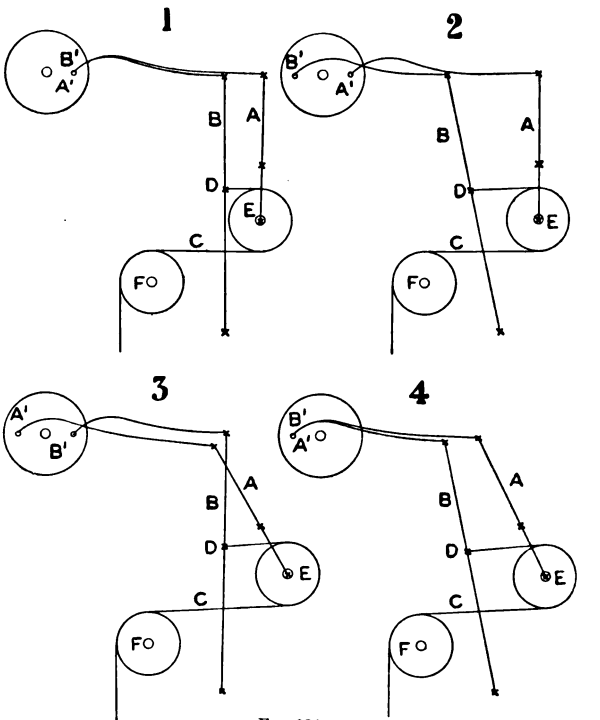

FIG. 224.

to more readily explain their action, instead of leaving them as in a loom.

The top box is level when both crank pins are on the right of wheel centres, as shown in division 1, for then d, e are as close as it is possible to place them. By moving the pin of b' to the left of its centre, number 2 box will

Digitized by Google

be level, as in division 2. By turning the pin of b' to the right, and that of a' to the left, the third box will be at the race board, because e has a lift of two boxes, whilst d has only a lift of one box (see division 3). When both crank pins are on the left of their centres, the bottom box is in line with the picker (see division 4).

The motion is negative only in the sense that boxes are not taken down positively, for vibration is effectually prevented by chain c, which is given out at varying speeds —namely, slow at the beginning and end of a change, quick at the centre.

The cylinders have adjustable segments to permit boxes and picking to be timed differently from shedding.

Positive Drop Boxes—Wright Shaw's

In 1857 Wright Shaw patented a positive box motion that has taken him over thirty years to develop to its present state. Its parts are shown in Figs. 225 to 228. Cam a is fixed to the tappet shaft and has a throw equal to the lift of one box, b is a sliding cam with a throw of two boxes; it is connected to a by a stud which causes it to rotate. Cams a or b constantly act on flanged bowl d, secured by a stud to lever e; the latter is centred at f, and from it a double rack g is suspended. Rack g spans a pinion h that is compounded with a pinion and disc, all fitting loosely upon a stud; the disc is furnished with six notches, and into the upper one a spring pin fits to hold the boxes steady. The second pinion gears into rack l at a point coinciding with the rocking-shaft; l forms part of spear rod m, and rack and pinion are held in gear by a spring n, strong enough to ensure them working properly under normal conditions; but in case

Digitized by Google

anything goes wrong with the picking motion, *n* contracts, the connection between them is severed, and a smash is thus prevented. By lifting handle 21, spring *n* is forced

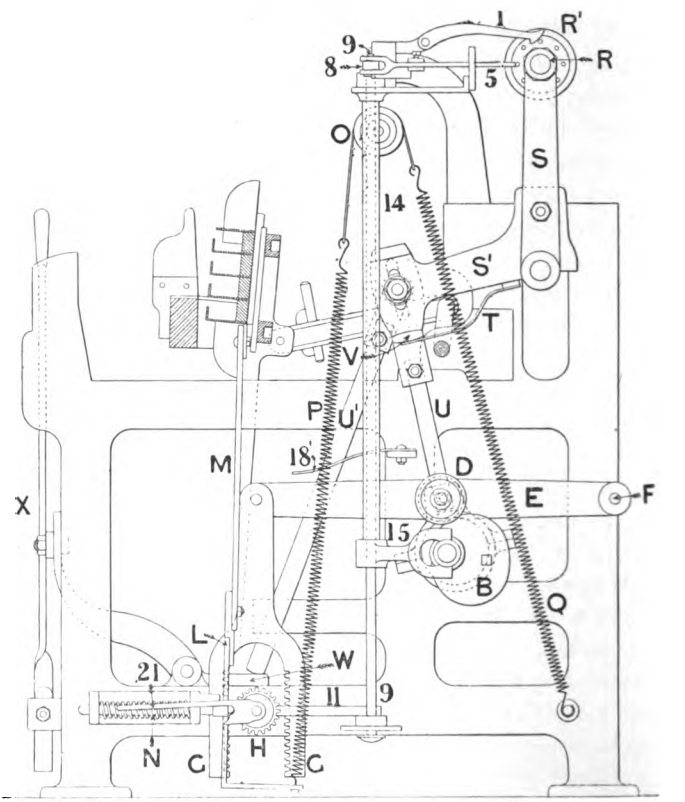

FIG. 225.

back, the rack on rod *m* is moved out of gear with its pinion, and the shuttle boxes can be adjusted by hand. Two long spiral springs are used to balance the boxes;

Digitized by Google

both are hooked into a strap passing round flanged pulley *o*, then *p* is connected to a bracket on the foot of rack *l*, whilst *q* goes to a fixed stud near the floor.

An eight-sided card barrel *r* is supported on a bell-crank lever *s*, and has a negative vibrating motion given to it by an eccentric keyed upon the tappet shaft, and a flat spring *t* bolted to the under side of horizontal arm *s'*. The eccentric strap carries a slotted arm *u*, that is provided with a lug *v*, upon which lever *s* rests, so as the full side of eccentric pushes up *u*, barrel *r* is forced out; but its

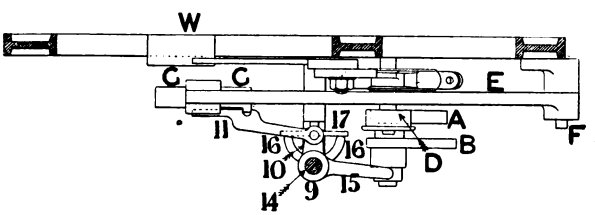

FIG. 226.

inward traverse depends upon the pull of spring *t* against the under side of lug *v*, which should have sufficient force to carry *r* forward without giving way, except in cases of obstruction, when its resistance is overcome, and *u* continues to descend without moving *r*.

Through the slot of *u* a stud on arm *s'* passes freely to support a flat piece *u'*, that goes down to the bottom end rail, with the object of stopping barrel *r* from rotating immediately the weft fork lever is moved. Resting upon the end rail is an arm *w*, set-screwed to a sliding rod that extends across the loom, parallel with and immediately in front of the rocking-shaft; it carries at its opposite extremity a piece that connects it with a pattern handle *x*,

Digitized by Google

placed alongside the setting-on handle; a bracket upon the latter moves both into their retaining notches simultaneously, but the starting handle can be removed from its notch without influencing x; this allows a weaver to turn the loom by hand when the driving strap is on the loose pulley. But if the weft fork lever acts, an extra arm pushes x and the rod moves forward, places w under u', and arrests barrel r in its forward movement before pawl 1 can drop over a stud in the lantern r' of barrel r, and thus prevents it from rotating.

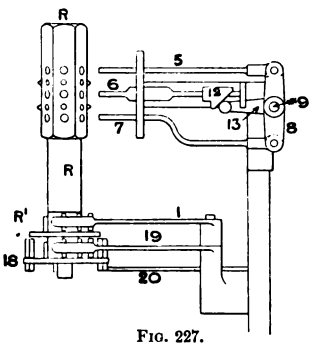

FIG. 227.

Five different kinds of flat steel cards (see Fig. 229) are fastened together to form a chain by rings 2 taking into suitable grooves, and rubber bands 3, or, better still, small steel clips, shown detached at 4 (Fig. 230), prevent rings 2 from falling off. This chain is passed round barrel r (Figs. 225 and 227), and the rotary movement of r presents each card in succession before three rods or needles 5, 6, 7, which are guided in a bracket. Needles 5 and 7 are jointed to a swivel piece 8, set-screwed upon the top of upright shaft 9, that also carries a second arm 10, hinged to a grooved piece 11; the groove of the latter receives a projecting piece from the inner arm of rack g; therefore, if either 5 or 7 is pushed back, 8 swivels, causes 9 to partially rotate, and 10, 11 to either pull or

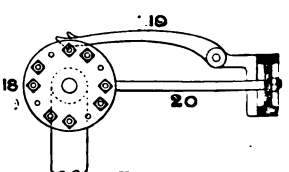

FIG. 228.

Digitized by Google

push one of the racks *g* into gear with pinion *h*; so the next upward movement of *g* will take one shuttle box up or down.

Needle 6 has an inclined piece 12 fixed to it, and when pushed back, 12 acts upon arm 13, mounted on tube 14,

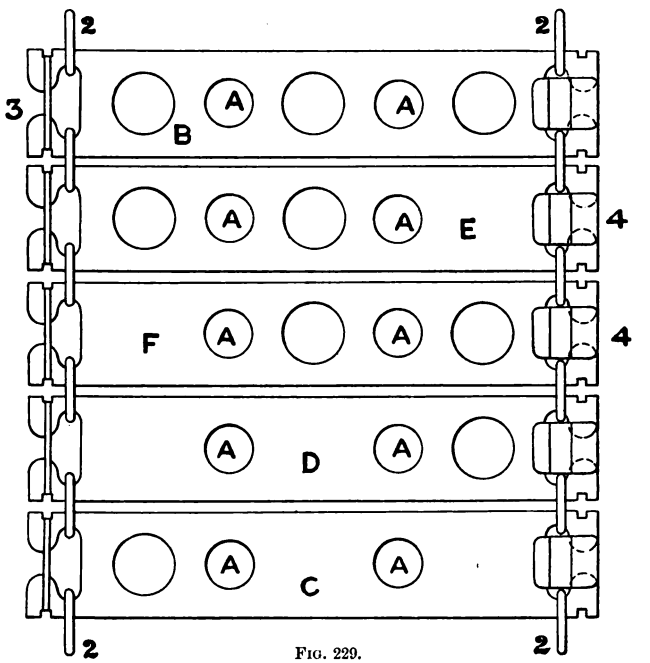

FIG. 229.

through the centre of which shaft 9 passes, and causes it to vibrate; in doing so, a forked arm 15, near the lower end of tube 14, takes into a ring groove in the boss of sliding cam *b*, and pushes *b* under bowl *d*, thus imparting additional movement to lever *e*, rack *g*, and the shuttle boxes, presuming that either 5 or 7 is pushed back with 6. To

Digitized by Google

prevent this motion from being jerky, flat springs 18′ press against the forward end of lever *e*.

After needle 5 or 7 has been pushed back by a card, it must be made to assume the level position shown at Fig. 227; this is accomplished by two curved pieces 16, pressing against a T-shaped hammer 17, on which a helical spring constantly acts to push it forward, and a similar spring presses against the rear of piece 12, to keep needle 6 in its normal position.

Two metal pegs found on every face of barrel *r* hold each card of the pattern chain (Fig. 229) by the small holes *a*, so as to bring the large ones exactly opposite the needles. A card *b* with three large holes effects no change; card *c* with a single large hole produces an upward movement of two boxes, *d* sinks two boxes; *e* with two large holes lifts one box, and *f* sinks one; hence to drop a box, push back the outside needle, to lift one, push back the inside needle; if middle and outside needles are moved two boxes will drop, and middle and inside needles will lift two boxes.

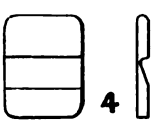

FIG. 230.

In order to economise the pattern chain, a disc 18 (Figs. 227 and 228) is mounted loosely upon the axle of barrel *r*. This disc has on one face twelve pegs, which, as the barrel moves to and fro, are caught by pawl 19, and $\frac{1}{12}$ of a revolution is made at each backward movement of lever *s*. On the opposite side of 18 a series of adjustable screw pins impinge against stop 20 fixed to the frame. Whenever this occurs, lantern *r′* does not assume a position for pawl 1 to act, consequently barrel *r* does not revolve, and the same card can be presented a certain definite number of times. If none of the holes in disc 18 are filled with screw pins, each card equals 2 picks; if alternate

Digitized by Google

holes are filled, a card equals 4 picks; two holes filled, one missed, a card equals 6 picks; three filled, one missed, it equals 8 picks; five filled, one missed, it equals 12 picks; and eleven filled, one missed, it equals 24 picks.

The advantages and shortcomings of Shaw's motion can be summed up as follows:—It is positive; the pattern chain is stopped when weft breaks; and if the picker is not clear of the boxes, or if a shuttle is half out of its box when a change is to be made, the spear rod moves out of contact with the driving pinion to prevent smashes; but only one box of the series can be skipped at any movement; and the card-saving appliance is useless where two picks of a single colour are required, also where the picks of any colour are not 4, 6, 8, 12, 24, or multiples of those numbers.

The Eccentric Motion

Between the years 1857 and 1870 Whitesmith introduced and developed a theoretically correct arrangement for working drop boxes positively by the aid of two or more eccentrics placed one inside the other, and capable of being moved independently or conjointly. If two are employed, the smaller has a throw of one box, and the larger, one of two boxes. By suitably manipulating them, any one of four boxes can be instantly moved to face the picker in a steady, easy way, entirely devoid of jerking.

All admit the value of eccentrics for this purpose, but there is a considerable divergence of opinion as to the best method of setting them in motion. As a consequence, a fairly numerous list of makers, each of whom employs special mechanism, could be made.

Under the circumstances, it will not be amiss to describe the one best known—namely, that made by Hacking & Co.

Digitized by Google

Figs. 231, 232, and 233 show different views of their invention. As in Diggle's chain, the parts are driven from

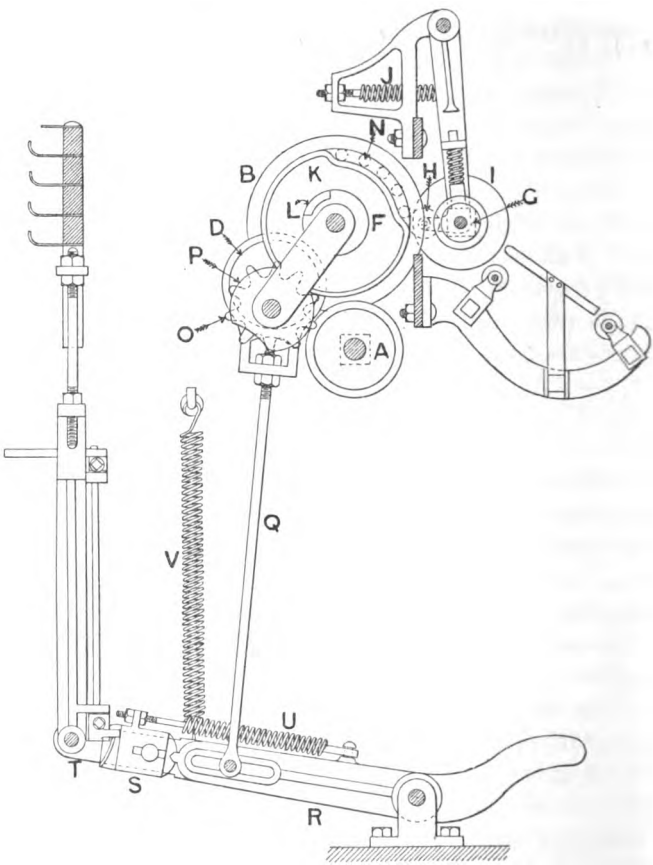

FIG. 231.

the crank shaft by a pinion *a* in this case of 18 teeth, gearing with a stud wheel *b* of 36 teeth, which at one

Digitized by Google

point of its periphery has three lengthened teeth; also, on one side, a bead is cast to form a cam, and from its centre a tubular sleeve projects for the purpose of receiving the stud, and of carrying two slotted hoops *f*. A card cylinder *g* is supported in a framing that swings on a pin at the top, and is furnished with a bowl *h*, to rest against cam *b*. In rotating, the full part of *b* pushes the cylinder from the points of two horizontal needles, and at the same instant the three wide teeth take into a wheel *i* of 20 teeth on the cylinder shaft and cause *g* to make $\frac{1}{4}$ of a revolution. By so doing, the next metal card is positively moved to face the needles, and a spiral spring *j* pulls them into contact.

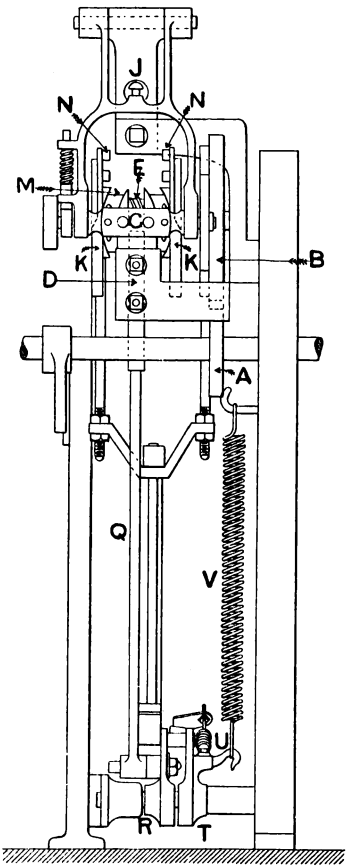

FIG. 232.

Two discs or peg wheels *k* face each other and slide freely upon the sleeve of *b*, but they constantly rotate by projections *l*, fitting loosely into slots of hoops *f*. Both wheels are kept apart when needles are inoperative by the pressure of a spiral spring *e* which is coiled round the sleeve. They can, however, be moved towards each

Digitized by Google

other by needles and grooved cams combined; the latter are formed in the bosses *m* of peg wheels *k*, and the former are pushed into the grooves by blank cards. Five pegs *n* are cast on the inside of each wheel to serve as teeth, and when one peg wheel approaches the other, *n* are capable of driving one or both star wheels *o*. Both will be moved if a blank in the card is opposite each needle, but a blank opposite one needle will produce a change on that side only.

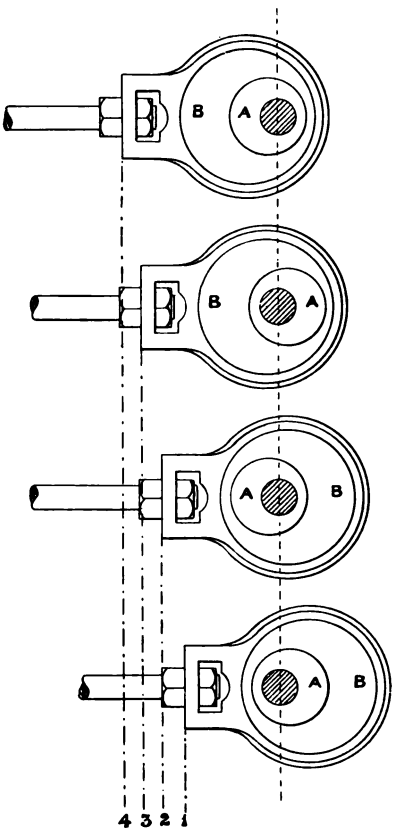

FIG. 233.

The small eccentric is loose on a spindle, the large one encloses it, and is in its turn enclosed by a strap. Each eccentric *d* is compounded with a star wheel *o* of 10 teeth, and a locking plate *p*; on the smaller they extend to the right, on the larger to the left. A locking plate is a disc, with two pieces cut out at opposite sides to exactly coincide with the full curved surface of the peg wheel, and before a change can be made, a thin part of the surface of *k* must be presented to that of *p*.

Digitized by Google

If a peg wheel acts on a star wheel, its eccentric is moved from one dead centre to another at a varying velocity, slow at the beginning and end, quick in the middle.

The eccentric strap carries a rod *q*, which is connected to a short lever *r*, wedge-shaped at its forward end and fastened by a slip catch *s* to a longer and parallel lever *t*, supporting the spear rod. The slip catch consists of a notched piece free to slide in a groove of *t*, but pulled by a spring *u* upon the wedge of *r*, so both levers move as one when the picking and box motions are working properly; but in case a shuttle is jammed in a box, *u* stretches, severs the connection, and permits the eccentrics to move without the boxes.

To enable the motion to work as light as possible, a spring *v* hooked into the spear rod lever and upon the framing serves as a balance.

Fig. 233 shows the eccentrics in all possible relations to each other; when the top box is level with the race board, the thin sides of *a* and *b* are at the top. To place the second box level, the thick side of *a* and the thin side of *b* must be uppermost. The third box requires the thick side of *b* and the thin side of *a* to be up. The fourth box is level when both thick sides are up.

One practical objection to the motion is, that as the eccentrics move in one direction only, similar cards at different parts of the chain produce dissimilar results. For instance, if the top box is level, and the second is required to move into picking position, a blank in a card opposite the small eccentric needle will lift the box, but if the next link is exactly like the last, the boxes will be dropped to their original positions. This occurs in all the varying positions of the eccentrics, and makes the chain difficult, or rather impossible, to read without first noticing their positions.

Digitized by Google

Cowburn & Peck's Motion

In 1889 the above-named inventors introduced a motion in which the valuable properties of Whitesmith's eccentrics form the central feature, but instead of using ordinary eccentrics, they employ a double crank and two discs. Each disc is free to turn on a stud in the framing, and has a pinion formed on its boss. The outer one *a* (Figs. 234, 235, and 236) carries a stud *b*, fixed to give a throw equal to the movement of one box. On the end of *b* a crank *c*, with a throw of two boxes, is loosely fitted, and its pin passes freely through a slot in disc *d*; it also supports an arm *e*, which is hinged to the spear rod lever *f*. On *e* are two drilled flanges to receive rod *e'*; the latter is screwed at the top to take two adjusting nuts, and a spring is threaded upon it long enough to rest upon a shoulder at its base, and bear against the bottom flange on *e*. In case a shuttle is trapped, as *e* moves down the spring contracts, and a smash is prevented. Similar connections on the spear rod provide for a similar contingency as *e* moves up.

Cradle *g* is constantly rocked on a stud by an adjustable crank *h* and a connecting rod *i*. At the outer end of *g* the lower parts of two racks *j*, *k* are centred in such a manner that they fall away from the disc pinions *a'* by gravitation and rest against the rear ends of two horizontal needles *l*, *m* (Fig. 236). A rack engages with a disc pinion whenever a blank card pushes back the needle against which it rests, hence the disc's motion depends upon that of the rack; and as contact is only made as the racks descend, a disc always moves in one direction, and it must make exactly half a revolution to carry crank *b* or *c* from one dead centre to another. When not in action, each

Digitized by Google

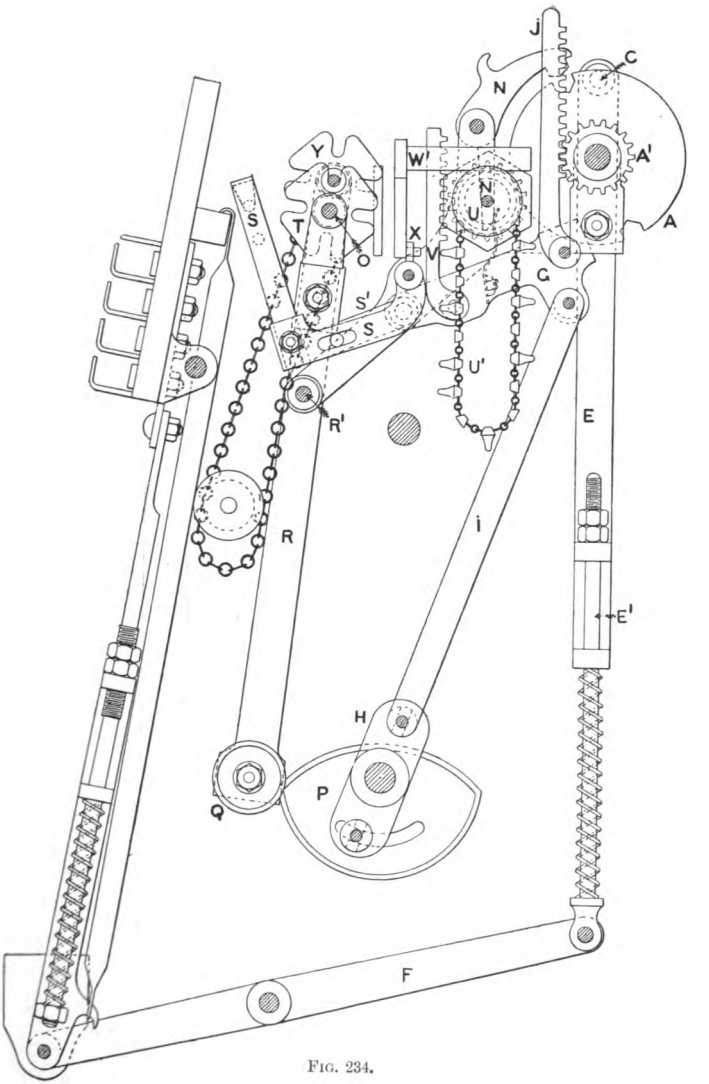

FIG. 234.

Digitized by Google

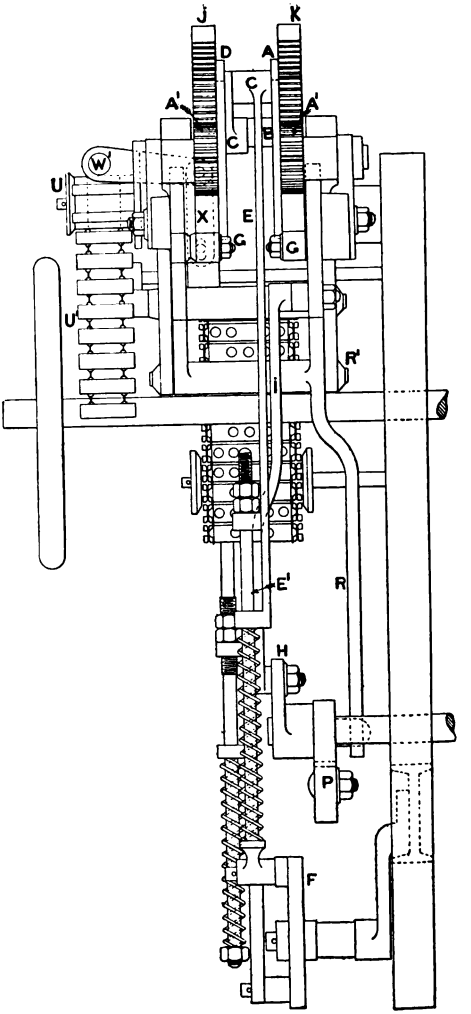

FIG. 235.

Digitized by Google

disc is locked to keep the boxes steady by flat springs that force catches *n* into the uppermost of two notches cut at opposite sides of the disc's rims. Vibration is thus prevented until a change is to be made, and then the backward movement of a needle bears on the lower end of catch *n* to lift its upper end clear of the retaining notch.

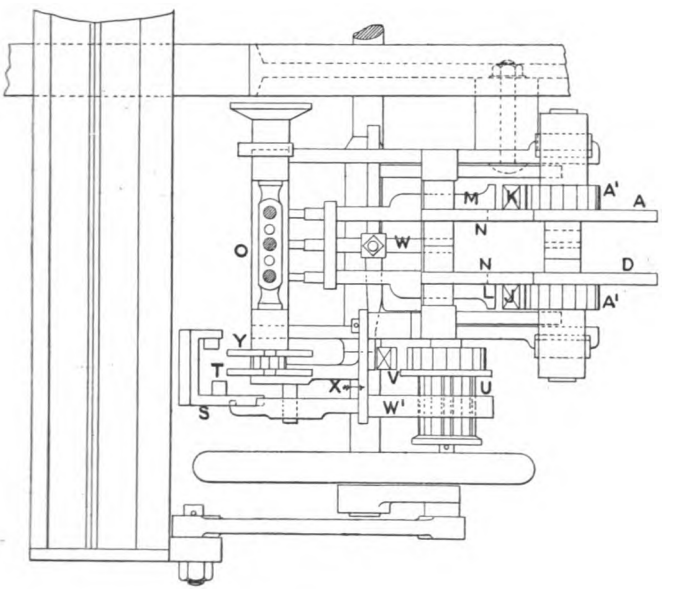

FIG. 236.

A four-sided card barrel *o* carries a star wheel *t* on the outer end of its shaft, and is oscillated on a stud *r'* secured to the framing, by a cam *p* upon the bottom shaft, which presses against a bowl *q*, supported on the lower end of arm *r*. Barrel *o* is rotated by one of two pins in an L-shaped pawl *s*, that engages with the notches of star wheel *t*, and also by a crank *s* (Fig. 234) keyed upon lever *g*, the pin of

Digitized by Google

which passes through a slot in the lower arm of *s* to give the necessary vibrating movement to the pawl.

Any box can be taken to the shuttle race as follows:— If stud *b* and crank *c* are both on their bottom centres, the top box is in position. If *b* is turned up and *c* left down, number 2 box is level. If *c* is up and *b* down, number 3 box is level, and if *b* and *c* are both on their top centres, the bottom box is level with the race board.

A link-saving motion is one of the best features of this invention. It consists of a hexagonal lattice barrel *u*, round which a chain of wooden lags *u'* is passed. The lags are alternately pegged and blank, except for scarves and handkerchiefs, when two consecutive thick or thin lags are necessary at two points to carry the pattern chain forward from the middle to the border links, and *vice versâ*. A thick lag followed by a thin one reverses the direction of the pattern chain, and it thus becomes possible to weave long patterns with a few cards. Lags of medium thickness are occasionally used as link economisers; in such cases they are just thick enough to move both pins of pawl *s* out of contact with star wheels *t*, *y*, then as a consequence barrel *o* does not rotate, and one link of the pattern chain is presented to the needles on two or more successive vibrations of barrel *o*. It is, however, questionable whether any real gain results from the use of such lags, for a reduction in the number of steel links is purchased at the cost of a corresponding increase of lags, the latter being far more bulky and unmanageable than the former.

Barrel *u* is only moved when the pattern chain has to be reversed; this is accomplished by a pinion wheel upon the inner end of *u* engaging with a third rack *v*, also rocked by cradle *g*, whenever middle needle *w* is pushed back by a blank card.

Digitized by Google

For Four Boxes

From No. 1 box to No. 2 box.
" " 2 " " " 1 "

" " 3 " " " 4 "
" " 4 " " " 3 "

This Card works the Boxes, as above, and at the same time acts upon the Lag Barrel.

From No. 1 box to No. 3 box.
" " 3 " " " 1 "

" " 2 " " " 4 "
" " 4 " " " 2 "

This Card works the Boxes, as above, and at the same time acts upon the Lag Barrel.

From No. 1 box to No. 4 box.
" " 4 " " " 1 "

" " 2 " " " 3 "
" " 3 " " " 2 "

This Card works the Boxes, as above, and at the same time acts upon the Lag Barrel.

This Card makes no change in the Boxes, but acts on the Lag Barrel.

This Card makes no change either in the Boxes or the Lag Barrel.

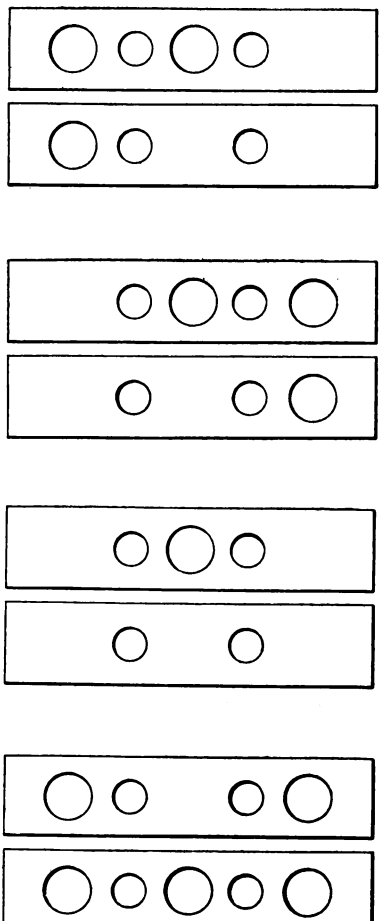

Fig. 237.

Digitized by Google

For Six Boxes

From	1	box	to	2	box.
,,	2	,,	,,	1	,,
,,	5	,,	,,	6	,,
,,	6	,,	,,	5	,,

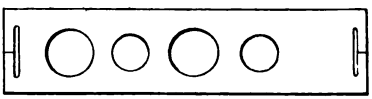

From	2	box	to	3	box.
,,	3	,,	,,	2	,,
,,	4	,,	,,	5	,,
,,	5	,,	,,	4	,,

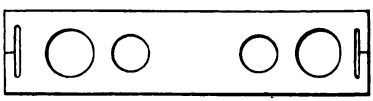

From	1	box	to	4	box.
,,	4	,,	,,	1	,,
,,	2	,,	,,	5	,,
,,	5	,,	,,	2	,,
,,	3	,,	,,	6	,,
,,	6	,,	,,	3	,,

From	1	box	to	3	box.
,,	3	,,	,,	1	,,
,,	4	,,	,,	6	,,
,,	6	,,	,,	4	,,

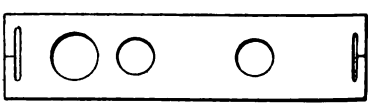

From	2	box	to	6	box.
,,	6	,,	,,	2	,,
,,	3	,,	,,	5	,,
,,	5	,,	,,	3	,,

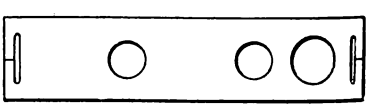

From	1	box	to	5	box.
,,	5	,,	,,	1	,,
,,	2	,,	,,	4	,,
,,	4	,,	,,	2	,,

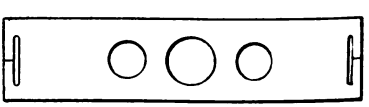

From	1	box	to	6	box.
,,	6	,,	,,	1	,,
,,	3	,,	,,	4	,,
,,	4	,,	,,	3	,,

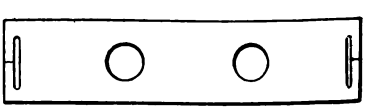

Reverser to be fastened to the end of any card required for reversing.

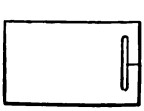

Fig. 238.

Digitized by Google

A cylindrical bar *w'*, parallel with the needles, rests upon a lag; it is bolted to a bell-crank lever *x*, and as the lags elevate *w'*, the vertical arm of *x* imparts a lateral movement to the shaft of pawl lever *s*, and so takes the upper pin out of gear with star *t*, and puts the lower pin in gear with a second star *y*; the latter is connected to chain barrel *o* by pinions, one on the barrel shaft, the other on the boss of *y*. As a consequence, barrel *o* will turn in one direction if star *t* is the driver, and in the other direction if *y* drives.

The motion is made for four and six shuttles, and the difficulties experienced in laying and reading a pattern chain for eccentrics, as compared with Shaw's, are clearly shown in the accompanying Figs. (237 and 238).

Circular Boxes

Although circular boxes have not met with so much favour in Lancashire as in Yorkshire, evidence is not wanting to prove that they are steadily gaining ground.

The shuttles are arranged in chambers formed in a wooden cylinder, and are moved forward or backward as required, to take each colour into striking range of the picker. Six shuttles are in general use, but twelve are not uncommon. In most cases a single box is moved, some are, however, capable of skipping one or more shuttles, but the system tends to complication and imperfect working.

The cylinder *a* (Figs. 239 and 240) is supported by a hoop *b* at the forward end, and by a spindle *c* at the outer end. Upon *c* a disc *d* is fitted containing as many pegs, arranged in circular form, as there are boxes, and also a star wheel *e*, against the under side of which an

Digitized by Google

ordinary spring hammer presses to hold the boxes true. Two long hooks *f*, *g* are forced by flat springs *h* into contact with the pegs, and engage at opposite sides of disc *d*; they are centred on bent levers *i*, each with its

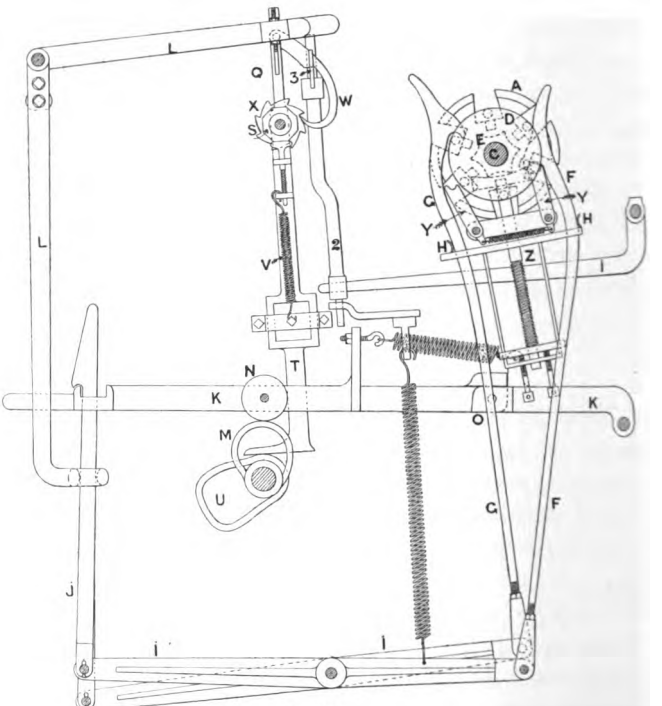

FIG. 239.

fulcrum pin near the bend. At the other end of *i* two vertical hooks *j* are hinged, and they pass through slots in levers *k* and *l*. Lever *k* is oscillated on a pin in the framing by a cam *m* on the bottom shaft, that turns against a bowl *n*. At *o* a knuckle joint is made, and a spiral spring

Digitized by Google

stretched above it is strong enough to keep the lever straight, except when a shuttle is trapped; in which case the joint gives way to prevent a smash. An L-shaped bar *t* rests upon cam *u* on the bottom shaft; it is held against the framing by a bracket, and supports an octagonal card barrel *s*.

The full part of *u* pushes up the barrel, but it is pulled down by a spiral spring *v* fastened to bar *t* above its bearing, and also to the framing. A spring hammer keeps *s* steady, and a catch *w*, hanging from the upper framing, pulls at a star wheel *x* on the barrel shaft to give $\frac{1}{8}$ of a revolution to *s* as it moves down.

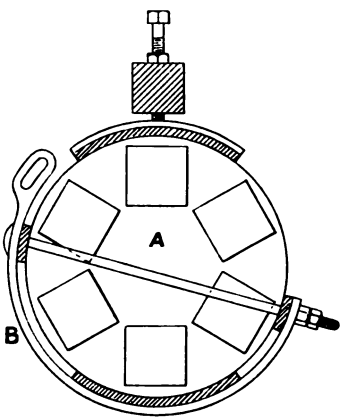

FIG. 240.

Card barrel *s* is thus seen to have a vertical movement, and at its highest point a blank card pushes up two vertical feelers *q* on the bell-crank levers *l*, that are immediately above the pattern chain, and thrusts back hooks *j* from the solid part of lever *k*; the latter in its next upward movement misses *j*, and the boxes are unaltered, but one hole in a card permits a feeler to enter a perforation in barrel *s*; and this leaves *q* stationary, with hook *j* over the solid part of *k*, consequently both go up together; they elevate the rear and depress the forward end of *i*, and thus pull down hook *f* or *g* to turn the boxes.

The parts, *h*, *i*, *j*, *l*, *q* are all duplicated, so it depends entirely upon which feeler is left horizontal whether the boxes will move forward or backward.

Digitized by Google

A spring hammer is not sufficient to prevent the shuttle boxes from moving too far, hence a stop of some kind is invariably added. One maker uses two small catches *y*, each swivelling on a pin fixed below and at opposite sides of the boxes; both are pulled apart at the top by a helical spring *z*, that connects them at their lower extremities. Stops *y* rest against the inner curves of the drawing hooks *f*, *g*, until either of the latter is brought into operation, when it thrusts *y* into the path of the pins on disc *d*, and checks the boxes at the proper place.

An attachment is found on most revolving box-looms for stopping the pattern chain if a weft breaks. One consists of an extra arm 1, fitted on the finger rod (see Intermittent Taking-up Motion), 1 passes through a slot in upright 2, and 2 supports a horizontal piece 3, beneath bell-crank levers *l*. Immediately weft breaks, the finger rod oscillates, 3 elevates *l* and pushes *j* off lever *k*, thus stopping the boxes.

A curved plate is fixed at each end of the boxes to keep the shuttles in position when not in use, and two cone-shaped rollers push the outer ends of the shuttle tips back as the boxes move. Without some such contrivance the boxes could not be moved freely at all times.

Compared with drop boxes, the advantages are, that an increase in the number of boxes does not necessitate a decrease in the velocity of a loom, for the movement being rotary, the weight on one side of the cylinder balances that on the other side, and leaves the power required to move them fixed, or nearly so, in all cases; also as there is no rebound, high speeds are practicable.

They have, however, disadvantages, which to some extent counterbalance the advantages. In the first place,

Digitized by Google

a loose reed is essential, because an ordinary stop-rod finger and swell act on the side of a shuttle, whereas in a revolving box, its top instead of its side is presented at the point where the finger would act. For which reason it is manifest that heavy cloth cannot be made.

Again, unless the checking apparatus acts suddenly, and with certainty, there is a tendency to carry the boxes too far.

PART XXI

TEMPLES

The tendency for cloth to contract in width is principally due to the tensile strain upon warp, but that upon weft also affects it. When warp threads from top and bottom sheds change places, they bear upon straight weft and produce a series of corrugations along its entire surface; and since a bent thread is longer than a straight one, extra material should be given off, but as this cannot be done, owing to warp closing upon weft all across the piece at the same instant, it follows that a considerable pull is exerted by bent weft to contract a fabric in the direction of its width.

Temples are employed to counteract this tendency during the operation of weaving, and so prevent side threads from being broken by the reed, and the reed from being injured by the warp.

Self-acting temples date back to Dr. Cartwright's time, but were so imperfectly constructed that nearly half a century elapsed before anything satisfactory was obtained, and even then they were not generally used, for many cotton fabrics continued to be woven within the

Digitized by Google

last twenty-five years with wooden temples that were moved by hand. At the present time, however, it is exceptional to find a cotton loom without a self-acting temple.

They are now made in such variety of detail that it becomes necessary to select a few types from the many for description. The following only will be dealt with :— namely, trough and roller; one, two, and three roller side temples, inclined and horizontal rings.

The trough and roller is by no means the oldest self-acting temple; it was preceded by the nipper and the horizontal ring; still it has been used for many years to hold out light and medium fabrics. It consists of a semi-circular iron trough or tube *a* (Fig. 241), that extends across the fabric, and has portions of the ends hollowed out to form bearings for roller *b*; bolt holes are also provided for securing two caps *c* above the roller. Roller *b* is about $1\frac{1}{4}''$ in diameter; it is fluted throughout its length, with the exception of about 4″ at the centre, and then the flutes on one side of the plain piece have a left-handed thread cut amongst them to form sharp teeth, whilst a right-handed thread is cut amongst those at the other side. A roller when fixed in position should turn freely without touching the trough, and the front edge of the latter is moved as near the cloth fell as possible without touching the reed. The whole is supported by two long springs *d*, bolted to the front rail of the loom, so in case of a trap, the temple will roll back without doing damage. Cloth, in passing over the trough edge, is deflected round the under side of roller *a*, and the maximum amount of bite is obtained by raising the front of *a* until the fabric is bent at a sharp angle; but at the best this temple is not adapted for heavy work; it has not

Digitized by Google

sufficient grip; it does not distend a fabric; the race board must be lower than is necessary for most temples; it covers about 2″ of the newly woven piece, and thus

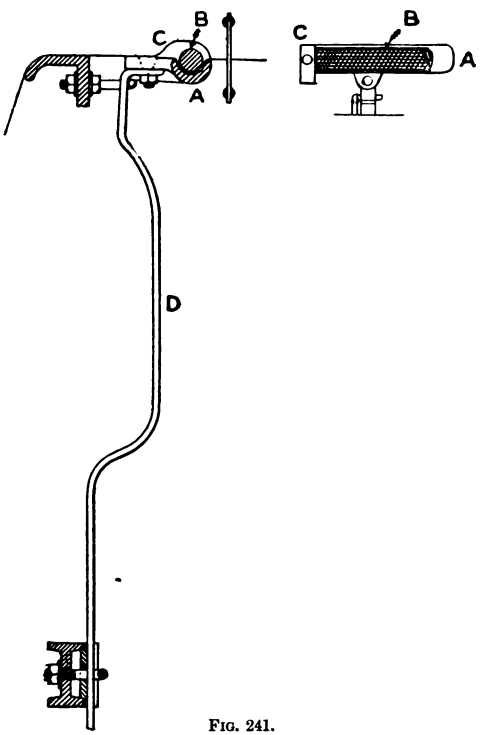

FIG. 241.

prevents to some extent the detection of floats and broken warp.

Still it is good for light and medium work, woven in loose reed looms, as it assists in throwing back the reed when a shuttle gets trapped in a shed.

Digitized by Google

Single-Roller Temples

are specially adapted to hold out light fabrics; they are also fitted on medium and moderately heavy looms, with long sweep cranks, say 7″ or more, in which the slay moves too near the breast beam to leave room for two or three rollers; they are fitted at each side of a piece in a cast-iron box upon a rod *a* (Fig. 242), provided with two holes, for studs *b* to pass through; and the latter are bolted on the breast beam. Behind each hole a spiral spring is pushed over a stud for the purpose of holding

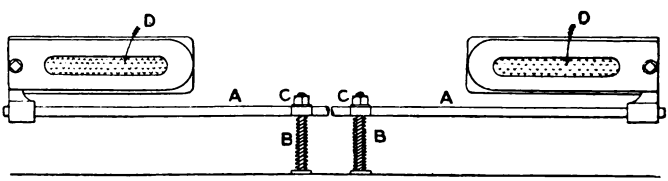

Fig. 242.

the temple forward, and a split pin, or thin collar *c*, secures rod *a* upon studs *b*. Where space is of less importance, a broad flat rod is often fastened to long springs similar to those used with the trough and roller.

For very light goods temple rollers *d* are made of box-wood, with steel journals, and a thin steel hoop at one end prevents injury to the wood. Brass and steel rollers are also common, having in most cases finely-pointed steel pins driven into them spirally; many rollers are slightly conical in form, the taper being from $\frac{3}{4}$″ to $\frac{5}{8}$″ in diameter on a 4″ roller. A temple box has a movable cap, which, when screwed down tight, leaves a space for the fabric to enter on a level with the roller centre. As the fabric is drawn forward, it is bent over the teeth and held by them

Digitized by Google

with sufficient tenacity to ensure good weaving and still leave the piece free from temple marks.

Many temples are capable of preventing a fabric from contracting unduly without being able to distend it. Considering that cloth invariably contracts between the reed and the bite of a temple, it is often desirable to stretch it slightly during its contact with the temple. One of

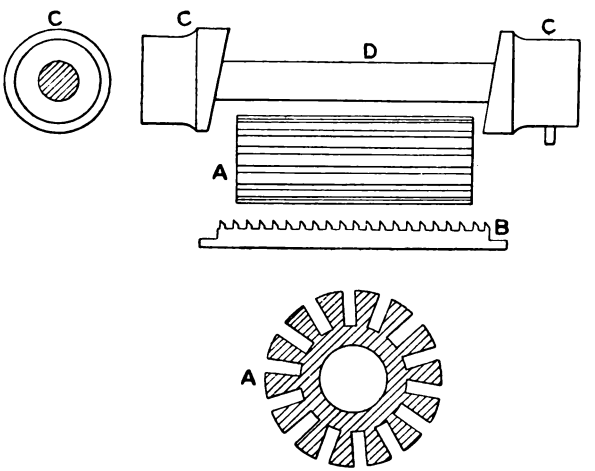

FIG. 243.

several similarly constructed single-roller temples has a fixed spindle *d* on which a loose boss *a* (Fig. 243) turns; *a* is $\frac{13}{16}''$ in diameter, and has fourteen longitudinal grooves cut in its periphery at equal distances apart. A saw *b*, with fine teeth and smooth protruding shanks, fits loosely into every groove of *a*. At each end of the spindle a hollow collar *c*, with an inclined edge, is secured, and all the straight projections on saws *b* enter the hollow parts of *c*, and are thus prevented from falling out. As boss *a* rotates,

Digitized by Google

one end of every saw presses against the cam-shaped edge of the inside collar and slides outward, and the teeth carry out the cloth at both sides simultaneously.

Two-Roller Temples

Two-roller temples, from $3\frac{1}{4}''$ to $4\frac{1}{2}''$ long, and from $\frac{7}{16}''$ to $\frac{11}{16}''$ in diameter, are largely used in the coloured section of the cotton weaving industry. Both rollers may be of uniform diameters; they may be conical, with a slope of from $\frac{1}{16}''$ to $\frac{1}{8}''$ on $4''$ of length; they may be placed parallel; or they may converge towards the centre of the fabric; thus, outside $\frac{15}{16}''$, inside $\frac{13}{16}''$ to $\frac{14}{16}''$ from centre to centre; they may converge towards the outside, so that if they are $\frac{15}{16}''$ apart at the inside, they will be from $\frac{13}{16}''$ to $\frac{14}{16}''$ apart at the outside. Rollers are sometimes similar in material and shape of tooth; at other times one is wood, or brass, whilst the other is iron; they have teeth inserted and formed in every conceivable direction and shape.

The temple box is of cast iron and provided with holes on the under side, to allow size and dirt to fall through, but the cap is brass, cast iron, or steel. In every case it is made to carry the fabric into contact with the front roller approximately at its centre, and a longitudinal tapering piece runs down the middle to divide the cap into two semicircles and press the cloth low down upon both front and back rollers.

Three-Roller Temples

If three-roller temples have two rollers in the box, and the centre one in the cap, the top roller takes the place of the deflecting piece. But if two rollers are fixed in the

Digitized by Google

cap, and one in the box, it is equal to working with the former upside down.

A temple box should allow the front roller to be brought within $\frac{1}{8}''$ of the box face, and should be set as near as possible to the reed without touching, with a slope coinciding with that of the fabric and warp, between breast beam and harness eye when the shed is closed, and as low down as possible without touching the slay.

The fixings must provide means of lateral adjustment, also of moving temples forward or back. Spiral springs, short horizontal flat springs, and long vertical flat ones, are in use for holding the temples forward and permitting them to move back when they strike the shuttle. Of the three, probably long vertical springs are best; for they are not so liable to become stiff and spoil the reed as either of the others.

Inclined Rings

Inclined ring temples are almost as varied as horizontal side rollers. From a single ring, with two or three lines of pins, to upwards of 20 rings, each with one row of pins, are met with. A few are made with two rings fitted $1\frac{1}{8}''$ apart on separate studs, placed one behind the other, and covered with a double semicircular cap. But by far the most general form of this temple is that of a series of parallel brass rings *a* (Fig. 244), with a single line of fine radiating steel pins. All rings are kept apart by a washer *b*, flat on one side, but furnished with an eccentric boss on the other, equal in length to the width of a ring, and every washer has a hole drilled through it on the skew. A stud *c* is securely fixed in a thick inner end-piece *e*, and rings and washers are dropped over it, care being taken to

Digitized by Google

keep the full side of each eccentric uppermost. When all are in position a second end-piece *e* is slipped upon *c*, and the whole bolted into the temple-holder *f*. Skew-drilled holes in washers have the effect of holding all rings *a* more or less diagonally to their axes, and the eccentrics carry all pins above the upper surfaces of *b* and inside their lower surfaces.

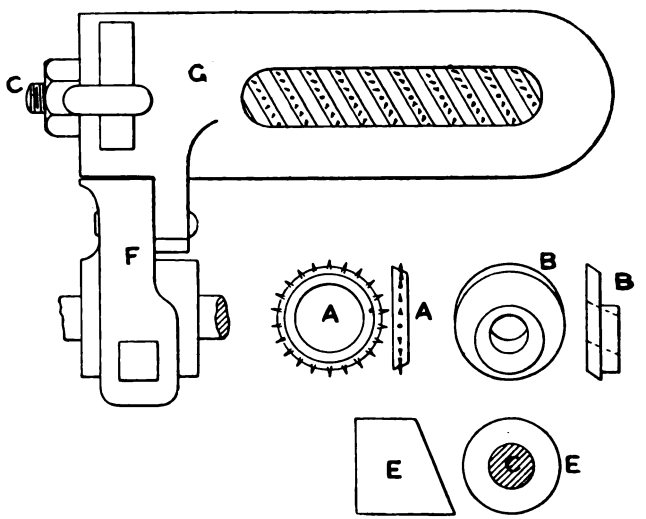

FIG. 244.

For rollers $\frac{15}{16}$″ in diameter, rings *a* are often $\frac{1}{4}$″ apart and slope approximately at an angle of 22° from the vertical. Broad looms, however, are provided with ring temples varying from 6″ to 9″ in length, and each contains 15 to 20 rings. As a rule, rings in long temples are not equidistant, nor is the angle a fixed one. A 17-ring temple, for example, may be $1\frac{1}{16}$″ in diameter, and have the two outside rings $\frac{5}{16}$″ apart, whilst the two inside ones are $\frac{3}{4}$″

Digitized by Google

apart; also, as they approach the selvage, the inclination of each increases.

These temples are, generally speaking, excellent for holding out and stretching a fabric; they are applicable to wide and narrow looms; those with a single ring act on the selvage only, and are mostly used for fabrics that would be injured by temple marks showing in the body.

Horizontal Ring

Horizontal ring temples are the oldest make now in use. A slotted bracket *a* (Fig. 245) is bolted to the inside of the breast beam, and temple-holder *b* is secured in the slot of *a*. A thumb-screw *c* traverses the bracket and goes through the piece in the slot, so by turning *c* to the right or left, temple plate *d* can be adjusted. Holder *b* is a thin slotted plate, with two overlapping edges, and has a flat spring riveted at its centre. Temple plate *d* is pushed between the overlapping edges of *b* and above its flat spring; the combined pressure of spring and bent edges holds the former tight. A brass roller *e*, $1\frac{3}{8}''$ in diameter, has three lines of radiating steel pins $\frac{1}{8}''$ long; it is fixed upon holder *d*, in a horizontal position, by a screw passing freely through its centre, and is encircled by a rim *f*, in which a diagonal slit *g* is cut slightly beyond the centre of *e* and towards the outside, for the fabric edge to enter, and be bent over the pins *h*. A wider slit of $\frac{3}{8}''$ at the rear permits the piece to leave them. In action the selvage of a fabric is gripped and stretched between the point of contact and outer centre of roller *e*, then, after passing that point, it contracts again until it finally passes out by the wide slot.

Digitized by Google

In case a shuttle is trapped, plate *d* is forcibly driven back; but it requires to be set forward again by the weaver before restarting the loom. This temple has good holding powers; still it is too rigid, and somewhat troublesome to manipulate after unweaving. It is also dangerous to use on fast-running looms, on account of weavers

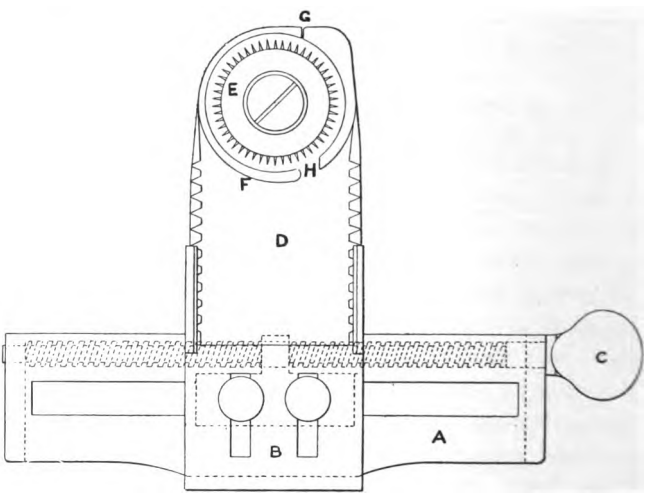

FIG. 245.

getting their fingers crushed when breaking off loose weft as the loom is in motion.

PART XXII

CENTRE AND SIDE SELVAGES

Centre selvages are required to hold the edge threads in position when two or more narrow pieces are woven side by

Digitized by Google

side in a broad loom. Although such a selvage is inferior to a true one, it is, nevertheless, very serviceable, and is in extensive use on fabrics in which strength is of minor importance. It consists in twisting the outside threads of adjacent inner edges half or wholly round one or two adjoining threads that may be stationary throughout, or interlace with weft in plain order. The simplest apparatus consists of a loop of worsted heald twine, with a smooth pendent mail at the bottom; this is tied to the front shaft, and has the crossing thread drawn through it after bending the latter under one or more straight threads which are to be all drawn into one dent of the reed; the crossed thread is also passed through an eye in a back shaft in the usual manner. Hence it will be lifted each pick—namely, straight by the back, and crossed by the doup or supplementary leash. From two to four dents must be left empty between each pair of selvages according to the fineness of the reed.

The chief objections to the above plan are, that crossing threads can never rise much more than half a shed, that the leash chafes as it is pulled round the stationary threads, and breakages are frequent.

Split fabrics are sometimes severed in the loom by drawing the gaps over sharp fixed knives, but more frequently after they leave it.

Briggs Bury of Accrington, in 1889, introduced a pair of flexible chains having a small ring at each end; the upper rings are attached to the back and front shafts respectively by heald twine, the chains hang free at their bottom ends, and all crossing threads are drawn through two rings, one on each shaft. When the front shaft is raised, a cross shed is formed and the chain on the back shaft hangs loosely; also when the back shaft is raised the same edge thread is

Digitized by Google

lifted in the open shed, but the chain on the front shaft is curled round the other side of the stationary thread. When both shafts are level both chains hang slack and form loops below the warp.

Such chains by their superior strength are capable of resisting the saw-like action of the rubbing surfaces for a much longer period than twine, and their flexibility, cheapness, and weight, render them well adapted for the purpose.

In 1886 Shorrock and Taylor patented a simple and efficient split motion, shown in front and side elevations in Figs. 246 and 247. It consists of a framing *a*, that is bolted to any convenient cross rail above the warp; from *a* wire *b* descends to a point below the bottom shed line, and is there coiled to form two large eyes *c*, that take crossing threads 1 for adjacent selvages. At *d* two small flanged rollers turn freely upon studs in *a*. Straps *e*, *e* are bent round *d*, led through guides *f*, and, on plain looms, one end of each is made fast by cords and a strap to the periphery of a pulley *g*, set-screwed upon the heald roller shaft *h*. The opposite ends are secured to a piece of elastic *i*, which is hooked into the bend of a wire support *j*, rising from frame *a*. At *l* two smooth brass eyelets are fixed in *e* to take the crossing threads 1, and stationary threads 2 are drawn through eyes *k* in frame *a*.

The oscillating motion of *h* causes *g* to alternately unwind and wind strap upon its surface. If the former takes place, elastic *i* contracts, draws up strap *e*, and thus carries eyelets *l*, with crossing threads 1, round flanged rollers *d*, and up on the other side of stationary threads 2, as shown in the sketch. The reverse rotation of *h* moves all the parts back to the starting-point, and places threads 1 on the opposite sides of threads 2; wires *m* merely serve as

Digitized by Google

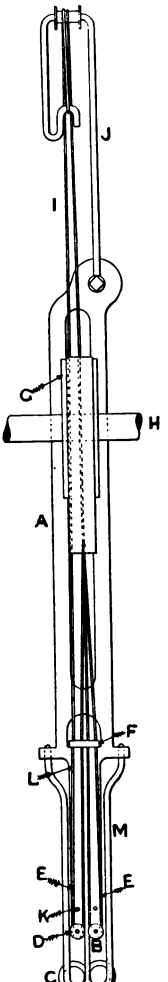

FIG. 246.

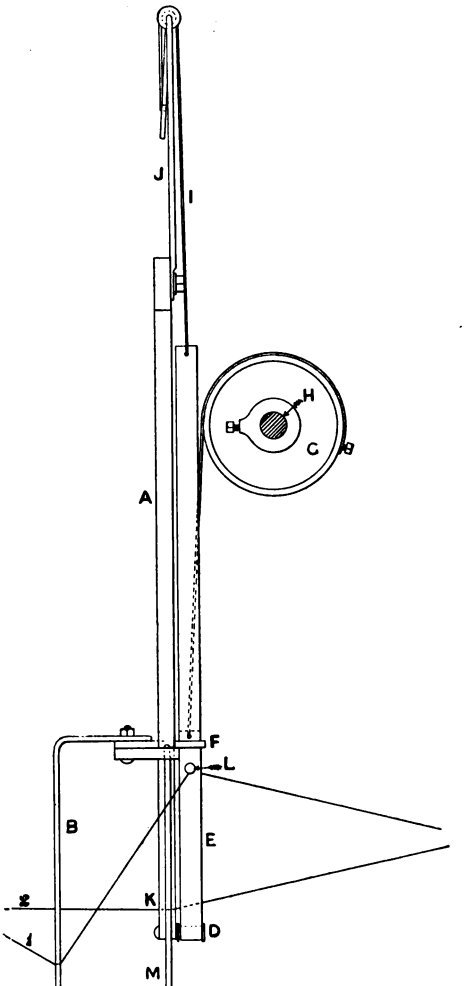

FIG. 247.

Digitized by Google

guides to hold ordinary warp threads out of touch with moving straps *e*.

This split motion is comparatively inexpensive, and may be easily applied to tappets, dobbies, or Jacquards; but in case either of the last named is used, jacks of one, and harness threads from the other, should be connected to a light lever, fulcrumed in such a manner as to multiply the lift of straps *e*, for they must in all cases move through considerably more space than healds or harness.

A motion, apparently of French origin, is constructed on somewhat similar lines to Shorrock and Taylor's; but there is this difference, that whilst the last named holds straight threads stationary, the one under consideration causes them to weave in plain order. To make the description as perspicuous as possible, the mechanism will be dealt with separately as if it served two functions—one to weave gauze, the other plain.

Figs. 248 and 249 are respectively front and side elevations: *a*, *b*, *c* are three compounded pulleys suspended from a top rail of the loom, *d*, *d'* is a strap which goes partly round, and is screwed upon *a*; its ends are connected to two treadles that move alternately and cause pulleys *a*, *b*, *c* to vibrate, or one treadle and a spring may be substituted for two treadles. The thick line *e* is an endless piece formed partly of strapping fixed to the surface of *c*, partly of twine, containing two mails, *f*—one for each selvage; it is led round warves or grooved pulleys *g*, *h*, *g'*. An oscillation of *a*, *b*, *c* in either direction will cause both mails *f*, and the warp threads they contain, to turn round warves *g*, *g'*, and ascend on the other side; in doing this each mail carries its warp round two intervening threads that must be drawn into the same dent as their crossing thread.

It yet remains to show how those threads are

Digitized by Google

moved in plain order. A third strap is secured to pulley

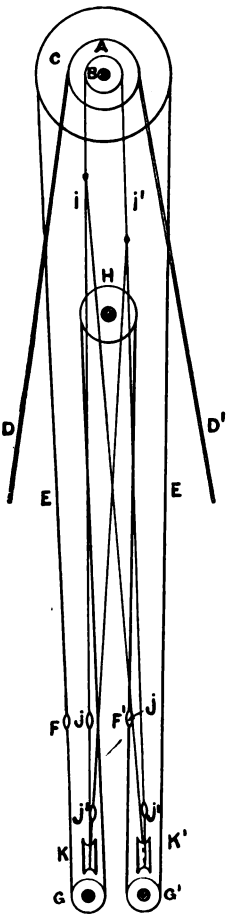

FIG. 248.

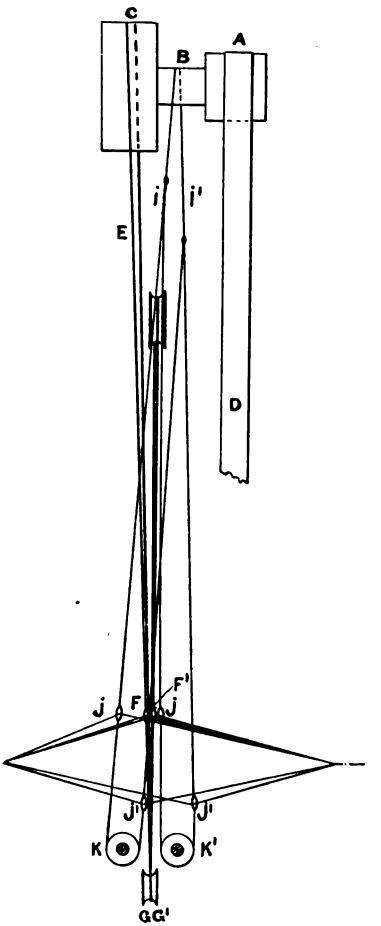

FIG. 249.

b, and its opposite ends have cords *i*, *i'*, attached in the

Digitized by Google

following manner:—Cord *i* is bent round warve *k*, from whence it goes up diagonally to cord *i'*, and is there tied. Cord *i'* is taken round warve *k'* and up again to *i*. Each is provided with two mails that form part of opposite selvages; hence if an oscillation of *b* causes mails *j*, *j* to ascend, and *j'*, *j'* to descend, the motion of *b* when reversed will enable plain cloth to be woven by lifting *j'*, *j'* and sinking *j*, *j*.

Taking both actions together, the cords appear somewhat involved; but where it is simply a question of twisting a constantly moving thread partly round a stationary one, it is very evident that the parts are quite as simple as those of Shorrock and Taylor's motion.

Inventors are continually adding to the number of appliances for weaving centre selvages, and it becomes a difficult matter to make a good selection from those available.

Motions are often met with that twist one thread entirely round another in the form of a spiral. Probably two of the best known were introduced by Sir Titus Salt, and by Boyd. The first named has a split pinion *a* (Fig. 250) bolted on the crank shaft; it is $\frac{9}{16}$″ across the face; it has sunk teeth, $\frac{3}{16}$″ wide in the centre, and smooth flanges of equal width on either side. A wheel, or ring *b*, $\frac{7}{16}$″ wide, has two smooth outer surfaces, and teeth projecting from the centre, for the purpose of gearing with the depressed teeth of *a*. The teeth on *b* are in the ratio of two to one in the pinion. Ring *b* has an inner diameter of 5¼″, which is crossed by a spindle that is supported by pressing its ends into holes drilled in the ring. This spindle has a key fitted near one end, a pin hole drilled near the other, and a thread cut to a point somewhat beyond its centre; it carries two lock-nuts *c*, having circular milled heads, two

Digitized by Google

spools *d*, a spiral spring *e*, and a short holding pin. Spools *d* are of brass, each $1\frac{7}{8}''$ over all by $\frac{3}{4}''$ in diameter; one has a key bed cut to receive the key in the spindle, the other would turn freely but for spiral *e*, which presses upon its inner end, and also abuts against a nut *c*; hence by moving

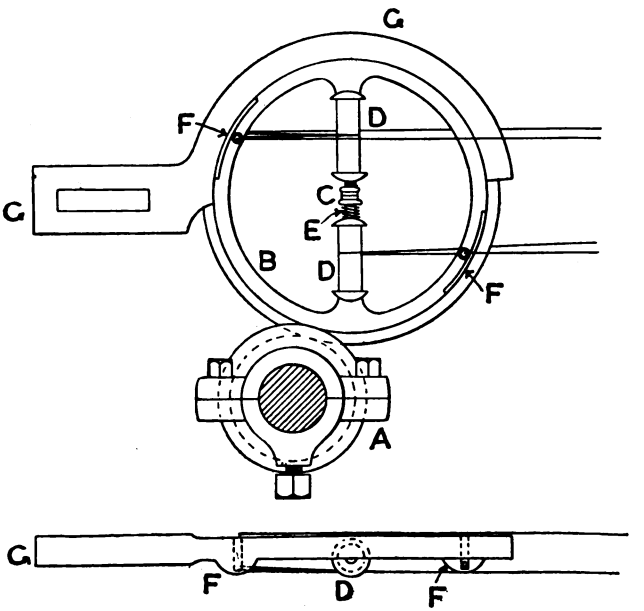

FIG. 250.

the nuts to compress the spring one spool will be thrust against the holding pin, and free rotation will thereby be retarded. Each spool has two threads wound upon it, and it is also necessary to fix them upon the spindle, so one will wind on, as the other unwinds yarn.

One side of ring *b* is perfectly flat, but the other side has two curved flanges *f* exactly opposite each other; both

Digitized by Google

project about $\frac{1}{2}''$ at their widest points, and within a space of $2\frac{1}{2}''$ they taper down to the ring. Below the centre of each flange a thread tube passes through ring *b* and protrudes on the flanged side $\frac{7}{16}''$; both have an eye drilled in the sides that face the spools; the threads from a spool enter one of the eyes, then one is taken to the right and the other to the left. Wheel *b* is situated above *a*, with its front edge immediately behind the healds, and its centre midway between the top and bottom lines of an open shed. It is held close upon *a* by a semicircular brass cap *g*, bolted to any convenient bracket on a cross or back rail of the loom; *g* is grooved to receive the teeth of *b*, and as a consequence the smooth edges of *a*, *b*, *g* are all in touch.

Continuous twisting is obtained as follows:—As *b* rotates, the flanges *f* are moved successively opposite the centre of a shed, and when this point is reached the two threads nearest the healds are distended by the flange and tube combined; whilst the other pair, being farther away by the diameter of the ring, are closer together, therefore the separated threads pass on the outside, but after a half revolution of *b* the second pair are distended to assume the outer positions, and the first pair being contracted move between them. Care must be taken to insert doubling twist into the spool threads in such a manner that the rotation of *b* will not untwist and break them; or, two pairs of untwisted strands may be wound upon each spool, when every revolution of the ring will put a twist into both pairs.

If Salt's motion is in proper working order an exceedingly neat and strong edge is obtained.

Boyd's contrivance consists of two circular spools which fit loosely inside brass holders. All are placed in recesses on

Digitized by Google

opposite sides of a central plate, and spools and holders are retained there by pressure from two thin flexible metal plates. The top of each holder is bevelled to slope outward, and the under side to slope inward. A back plate holds what would in ordinary splits be the stationary threads; but here they move up and down continually in opposition to the spools; thus, if for one pick these threads form the bottom shed, and spool yarn the top shed, on the following pick they will change places, in doing which they must slide between the spool-holders and the middle plate, but in moving down again to assume their original positions the upper bevels will carry them between spool-holder and outer plates, therefore they twist round and round the spool yarn, and make one half-twist between each pick of weft. A tappet and spring give the vibrating motion.

This also forms a good strong selvage, but it may be affirmed of both Salt's and Boyd's inventions that their cost precludes general adoption.

Plain Side Selvages

Plain selvages are made on sateens and twills in various ways without increasing the number of shafts.

By means of a contrivance known as a boat, a selvage sufficiently like plain cloth to answer the purpose is readily obtainable. If, for example, a 5-shaft sateen, 1 up and 4 down, is required with such a selvage, two boats, situated at opposite sides of the piece, are supported by and vibrate upon round pins bolted to the inside framing of the loom, behind the healds, and below the warp line.

A boat consists of a piece of wood 2″ long, that is flat at the under side, but curved on the top to provide sufficient material in which to drill a hole large enough to

Digitized by Google

take the fulcrum pin. Two pieces of leather, each about $1\frac{1}{2}''$ long, and wide enough to reach across the wood, are nailed to the under side and turned round opposite ends, then a series of reed wires are riveted in the leather, twisted half round and bent over at the top, as seen in front and side elevations in Figs. 251 and 252, where *a* is the wood, *b*, *b'* the leathers, *c*, *c'* the wire, and *d* the hole

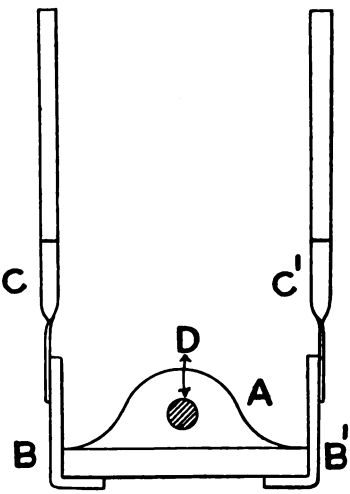

FIG. 251.

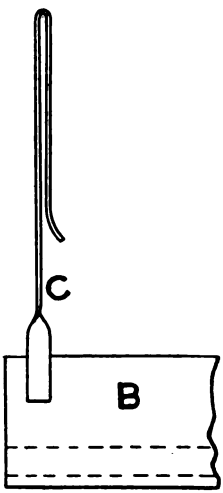

FIG. 252.

for the fulcrum pin. Selvage threads intended for shafts 3, 4, 5 are passed through the loops of *c'*, and those for shafts 1, 2 go through the loops of *c*, then every thread from *c* goes over a flattened down eye in shafts 1, 2, and every thread from *c'* goes over one in shafts 3, 4, 5. As a consequence, a lifted shaft will elevate one end of a boat and depress the other end; the former allows its threads to rise to a top shed, but the latter pulls all its threads down to the race board.

Digitized by Google

By suitably drawing warp through boat loops and over heald eyes, twills, and other satins than the one given as an example, can be woven with perfect plain edges in some cases, and with only slight defects in others.

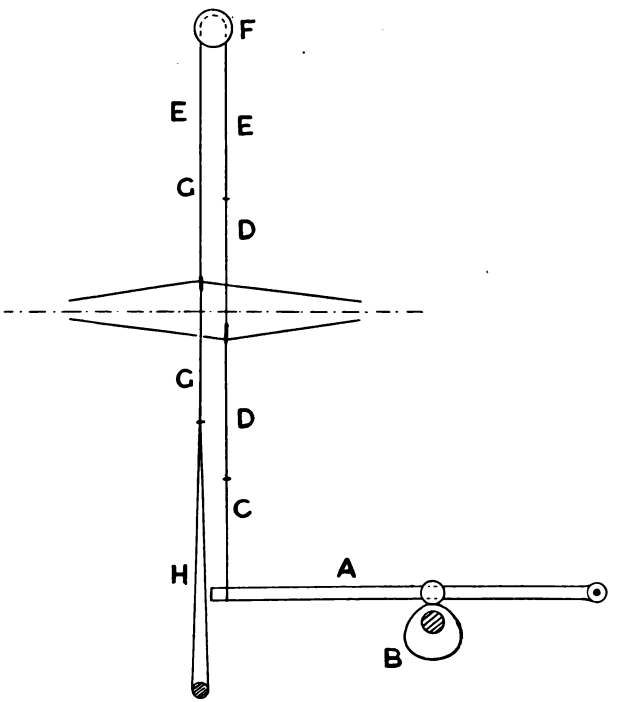

FIG. 253.

Another method of weaving plain cloth selvages is equally simple, and does not greatly differ in cost. It is illustrated in Fig. 253, where *a* is a light lever resting by its own weight upon the top of a cam *b*, and from which a cord *c* ascends to control a series of harness couplings *d*, that are

Digitized by Google

connected by their top loops to a second cord *e*; the latter is bent round a grooved pulley *f*, and at its lower end supports a similar series of couplings *g*, whose bottom loops are made fast upon a stout elastic cord *h*, or upon several such cords. Lever *a* must be heavy enough to distend cords *g* in case the thin side of *b* is uppermost, and thus reverse the positions of mails in *d*, *g*; but when cam *b* lifts lever *a* the elastics *g* exert force enough to move the mails back to the former position. Hence if *d* contain all odd threads, and *g* all even ones, plain cloth will be woven.

A similar plan, but with a single mail, is adopted to manipulate a catch cord for fabrics in which two or more picks are to be driven through the same shed, and where, without some such contrivance, the weft would be drawn back again with the return of a shuttle.

PART XXIII

TIMING AND FIXING OF PARTS

In the early days of power-loom weaving it was discovered that an iron framing was best adapted to meet the requirements of a loom—namely, great strength and compactness, combined with cheapness. Strength—in order to resist the shocks and vibrations resulting from several distinct sets of intermittent mechanism, which, although working in harmony, and deriving motion from a common source, act and react upon each other to a considerable extent, and compactness—is necessary to economise floor space. The framing consists of two ends united by longitudinal, and supported by transverse rails. Its design is

Digitized by Google

of great importance, for it not only determines the position and relation of one part to another, but it materially affects the cost and amount of production, by rendering it an easy or a difficult matter to adjust, repair, and manipulate the entire machine. The cost of running a loom depends largely upon the distribution of strength throughout the framing. If it is not strong enough to sustain the frequently recurring shocks at the points where impact takes place, vibration and breakage will be transferred to other parts.

From the front to the bottom centres of the cranks' circles, beating up, shedding, and picking are performed, and the suddenness of their action consumes a large amount of power; but after passing the latter point little force is needed to carry the cranks through the remaining $\frac{3}{4}$ of their circles.

The tappet shaft sustains the greatest share of strain, which in shedding is upward, whilst in picking it is diagonally forward. Strain on the crank shaft is backward and slightly downward; therefore that resulting from the conjoint action of these shafts will fall somewhere between the two centres, and the framing should there have its greatest strength.

Its height should be such that the weaver can readily reach any part requiring attention. From 33″ in narrow looms to 38″ in wide ones is the usual distance between floor and breast beam; and in Lancashire an addition of $1\frac{1}{2}$″ to 3″ gives the height of back rest.

The width or stretch varies with the nature of the material to be woven and the mounting of the loom. An ordinary calico loom is from 36″ to 38″ wide, but narrow looms designed for heavy work are 40″ to 44″, and broad looms from 52″ to 56″ wide.

Digitized by Google

The warp line is determined by the relative positions of back rest, breast beam, heald eyes, and lease rods. Upon this, as upon many other important matters, experts hold different opinions, especially as to the exact positions the parts named should occupy. Some advocate placing the breast beam and back rest in one horizontal plane, and (with a lease in which two threads are over and two under each rod) the first rod and cloth fell to be equidistant from the centre heald shaft, and then sinking all heald eyes

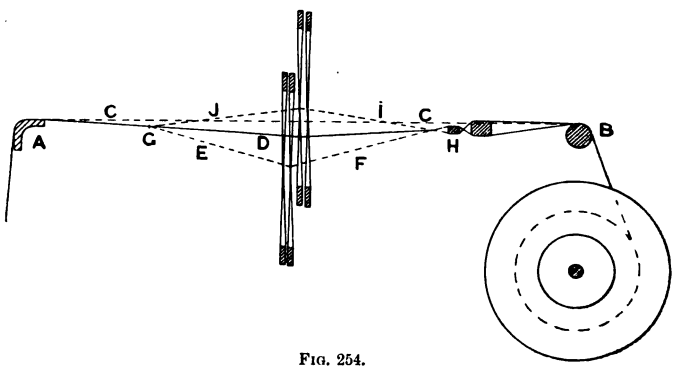

FIG. 254.

below a straight line drawn from back rest to breast beam, so that an upward movement given to some warp, and an equal downward movement given to the remainder, will form equal angles before and behind the healds in the bottom shed, and equal but smaller angles in the top one.

See Fig. 254, in which *a* is the breast beam, *b* the back rest, dotted line *c* the horizontal plane containing both, *d* the closed line of warp, *e*, *f*, *i*, *j*, respectively bottom and top lines of an open shed, *g* fell of cloth, and *h* front lease rod. It will be seen that angle *e*, *c* equals angle *f*, *c*; also that

Digitized by Google

angle *j*, *c* equals angle *i*, *c*; but triangle *e*, *f*, *c* is greater than triangle *j*, *i*, *c*.

The angles being the same, equal strain will be put upon the warp on both sides of the healds, but more on the bottom than the top shed. As a consequence, all threads occupying the former position will be tight, whilst those in the latter position will be slack. This is done with a view to prevent warp threads, that pass in pairs through the reed, from running together in the fabric, and is assisted by partially or wholly opening a shed intended for the following pick before the reed drives the last one into position, then, during the operation of beating up, loose warp threads are separated from tight ones, and the cloth appears to be composed of threads all equidistant.

In Lancashire, as already mentioned, it is usual to elevate the back rest about $1\frac{1}{2}''$ above the breast beam, and sink the heald eyes as before; but cover is regulated in the cloth by moving the lease rods closer to the back shaft to tighten a top shed, and nearer the back rest to slacken one. This plan gives larger angles behind than before the healds, and puts more strain upon warp in one part of a shed than another.

If fabrics are woven face down, the back rest is dropped and heald eyes are raised, to leave the bottom shed slack. Inequality of tension, however, should not be taken too far, or corded cloth and broken warp will be frequent.

The bevel of a race board depends upon length of sword, positions of rocking shaft and connecting pins, throw of cranks and warp line. The warp line of an open shed determines the length of swords, and as the latter are often perpendicular when reed and fabric touch, the position of rocking shaft is in such cases also obtained.

Some maintain that vertical swords are best on account

Digitized by Google

of a blow being more effective when delivered at right angles than from any other point. If this contention is worthy of consideration, a blow from a reed to be at right angles to a fabric should be given when the swords incline towards the cranks, because a fabric usually slopes from breast beam to healds, and this of course implies moving the rocking shaft nearer the front rail.

Cranks for narrow and medium looms move the reed $4\frac{1}{2}''$ to $6''$, and in wide looms from $6''$ to $12''$. When the requisite size of cranks and length of connecting arms have been obtained, proceed to fix the former's position in the framing by the rule given on p. 338. Couple arms and swords, place the cranks on their bottom centres, and make the bevel of the race board similar to the bottom warp line; but reed and shuttle box backs are vertical when reed and fabric are in contact.

After defining the position of the crank shaft, proceed to fix the bottom one so that picking and shedding tappets can be readily adjusted, but do not make the driving wheels larger or heavier than necessary, else as they revolve the energy stored up by them will be expended upon the frogs of a fast reed, and the brakes of a loose one, each time the machine is brought to a stand. In looms designed to weave stout fabrics, the driving wheels are intentionally made large, and heavy fly wheels are fixed upon the main shaft, to accumulate force enough to give steady turning as the cranks approach their bottom centres. Still the rule holds good that there should be a minimum of weight in all moving parts. As the teeth of wheels wear rapidly at the picking point, it is advisable to move both $\frac{1}{4}$ of a revolution, and then key them upon their respective shafts again before the teeth are totally destroyed.

All parts of a loom are regulated by the movement of

Digitized by Google

the cranks, because they receive power direct from the main driving shaft and transmit it to all parts of the machine. When they are on the fore centres, beating up takes place, and as movement continues, other pieces of mechanism are brought into operation. Although picking follows shedding, it is a common practice to set the former parts first, as it is customary to run new looms some hours before any attempt is made to weave with them, in order to see that everything is working correctly. For good picking, all parts at both sides of a loom should be equal; the tappets and cones (if this pick is taken as an example) should be in contact all the way round, and force should be properly directed. A long shuttle box is also of great advantage, as it materially assists in preventing a shuttle from flying out by serving as a guide. First of all, the picking arms and straps are to be prepared and fixed. Unless care is bestowed upon this matter, an arm will put a twisting strain upon the spindle as its picker approaches the forward end of its traverse. A long arm will give too much leverage, but a short one will damage the strap, the spindle, and the picker. In most narrow looms, if an arm moves through an angle of 40°, approximately 30° will be passed through before it is parallel with the framing, and the remaining 10° will cause it to slant inwards. To find its proper length, put the cranks on their fore centres, draw the arm over the middle of spindle, and the centre of picking strap, where it leaves the arm, should be over the spindle centre. The length of strap can be obtained by turning the cranks on their back centres and moving the arm backward and forward, when a picker should slide freely from end to end of the spindle without the strap being unduly slack. If, however, it is afterwards found necessary to lengthen or shorten the strap, this can be readily done, either by adjusting

Digitized by Google

the strap itself, or by unscrewing the top nut of the upright shaft and moving the upper ring and arm in or out, but it must be remembered the time of picking is thereby slightly altered.

Slow-running looms should begin to pick when the cranks are on, or a little past the bottom centres, but it is usual to pick 10° to 15° before that point is reached in fast-running looms. To set a pick, hold a picker against a box end, turn the shaft until the picker begins to move, then see if the cranks occupy their proper positions; if not, loosen the bolts that pass through the curved slots in the tappet, move both shell and nose in the required direction, and screw all tight again; after which, continue to turn the shaft until the tappet nose and cone centre are in contact, when the former should be from $\frac{1}{8}''$ to $\frac{3}{16}''$ away from the outer extremity of the cone. If more force is required, move the tappet nearer the upright shaft; but it is desirable that as little power as possible shall be transmitted to a picker.

In some cases shedding and picking tappets are correctly timed with each other, but not to the slay, then any alteration in the time of picking should be accompanied by a corresponding alteration in the time of shedding. This is obtained by loosening the crank-shaft bearings, lifting one wheel out of gear with the other, and moving the tappet shaft in the required direction, after which the bearings are again secured. See that the shuttles are equal in weight and sufficiently heavy to overcome any drag from the weft. They should not, however, be too large, for large shuttles require large sheds, and the latter, by putting great strain upon warp, cause numerous stoppages to repair broken threads, and it must not be forgotten that more time is needed to repair warp than to replace weft.

Digitized by Google

If a check strap does not prevent a shuttle striking against a box end, the cop will be thrown off, or if bobbins are used, the holding pin will be broken, and shuttles will rebound. When cranks are on their bottom centres, a picker should be about 1″ from the box end.

Shedding tappets are fixed to act at different times to suit the kind of fabric to be produced. If cover is unimportant, and a tappet is used on which $\frac{1}{3}$ of a pick is allowed for dwell, a shed will be almost closed when the reed and cloth are in contact, but it must be fully open by the time a shuttle enters the warp; therefore, to set such a tappet, place the cranks in their picking position, and turn the tappet in its working direction until a treadle is pressed to the bottom, and there fix it firmly upon the shaft. Where cover is required, put the cranks on the top centres, turn the tappet round until both treadles are level, then screw it up tight. In case a difference is made in the diameters of tappet plates, care must be taken to connect the treadle to the back shaft that is actuated by the largest plate. A rule obtains amongst overlookers to lift the back shaft of a calico loom when a pick is delivered from the driving side. If springs are used to lift or pull down heald shafts, test each one before attaching it, to see that all are equal in strength, by suspending them in succession from a hook. Hang a weight of from 4 to 7 lbs. on every spring, and select those springs that stretch to the same extent.

Back rest, breast, and warp beams should be parallel with each other; the warp should be wound on with an even tension, and level all across; it should be neither wider nor narrower than required, or the selvages will stand oblique and be liable to get broken. Ropes or chains must be wound on ruffles to permit of regular slipping, and the

Digitized by Google

weights require constant attention to secure a fixed pull.

Set the pushing catch of a taking-up motion to drop into the hollow of a tooth in the ratchet wheel when the cranks are upon their fore centres, then raise or lower the driving stud until the catch takes one tooth as the slay moves back; turn the cranks to their back centres and fix the holding catch about $\frac{1}{8}''$ past the bottom of a tooth.

In fast-reed looms stop-rod blades must clear the frogs by $\frac{1}{4}''$ when a shuttle is in its box, and they should be long enough to stop the slay when the reed is more than the breadth of shuttle from the fell of cloth—say $2\frac{1}{2}''$.

If a steadying spring for a loose reed is just strong enough to prevent the latter from vibrating as a shuttle moves across, nothing more is required from it. But when the cranks are on their top centres, a space of 2″ should exist between fingers and frogs, or sufficient room will not be provided for the fingers to oscillate and slide along the upper incline in case of accident. The fingers must hold the reed firm when it touches the fabric. To do this successfully, their tips must pass the front edges of the frogs about $\frac{7}{16}''$.

A weft fork tappet should move its hammer lever as the cranks pass round the front centres, and so long as weft is intact, the fork must clear the hammer head by $\frac{1}{4}''$, and also pass through the grid without touching at any part.

Shuttle boxes ought to begin to move soon after a shuttle has entered a box, so that all motion will cease before the picker acts for the following pick; hence boxes may begin to change as cranks reach the top centres, for then half a revolution is allowed to move and steady them before the following shuttle is driven across.

Digitized by Google

Temples are fixed nearer to or farther from the reed, as the piece to be woven is light or heavy. The inclination also varies, but as a general rule they are set as near the reed as possible without touching, with the front edge from $\frac{3}{16}''$ to $\frac{5}{16}''$ lower than the breast beam.

PART XXIV

WEAVING ROOMS OR SHEDS

Weaving sheds, in this country, are now generally built to provide for a large number of looms on the ground-floor, in order to secure freedom from vibration, uniformity of humidity and temperature in the atmosphere; also, because the plan admits of the most convenient arrangement of machinery for the worker—easy supervision, small cost of building, gearing, and carriage of material from place to place. A situation protected from dry winds and open to moist ones, with a clay subsoil, is desirable. But other things must be considered when a site has to be selected, such, for instance, as the close proximity to a good supply of water and fuel, ready access to the market for manufactured articles, and a locality in which experienced operatives are plentiful.

In many cases preparatory machinery is placed in a contiguous building of two or more stories for the purpose of economising floor space, but whatever the plan adopted, machinery should be arranged to prevent the material going over the same ground twice, or the cost of working will be increased.

Shed walls *a* (Figs. 255 and 256) are 14′·0″ to 16′·0″ high and usually 14″ thick, except when one wall *b* has

Digitized by Google

to support the main shaft *c*, then it is increased to 18″ or 24″; but this shaft sometimes rests upon columns built in the wall, and it is desirable for the sake of cleanliness and comfort to the work-people to isolate the shaft from the shed by walling it off.

The roof is supported partly by the walls, but principally

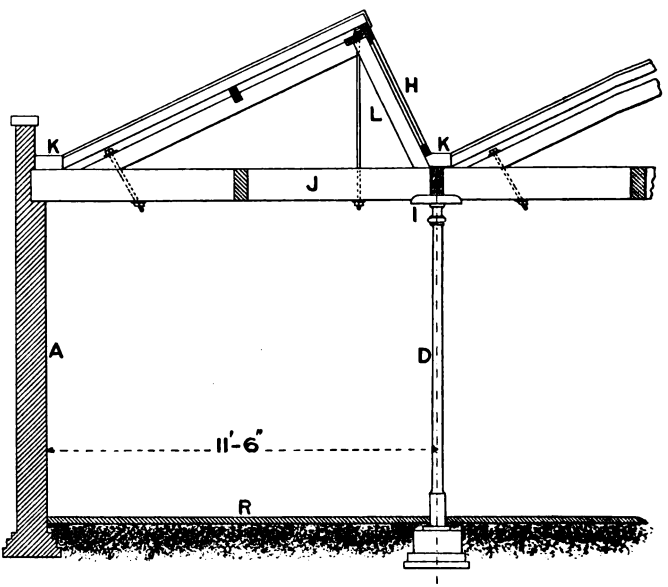

FIG. 255.

by a series of cast-iron pillars *d* erected upon a concrete and stone foundation. In sheds constructed to weave plain cloth, the pillars have a diameter of 5″ at the bottom, and $4\frac{1}{2}$″ at the top, with a metal thickness of $\frac{5}{8}$″ at the former and $\frac{1}{2}$″ at the latter places; as they only support a light roof and the shafting, this strength is ample; but in places where Jacquards are used the columns should be stronger,

Digitized by Google

and have lips cast upon them from 9′·0″ to 12′·0″ above the floor line to support a network of light girders on which the Jacquards are to rest. An additional 1″ in diameter and $\frac{1}{8}$″ in metal thickness will in most cases suffice. The arrangement of columns depends largely upon the class of loom to be used; they are generally arranged to take four looms—two in length, and two in width, and leave walking space between and round them. Narrow looms are from 3′·6″ to 4′·4$\frac{1}{2}$″ wide, averaging 4′·0″ or 4′·1″; and broad looms are from 4′·7$\frac{1}{2}$″ to 5′·8″ wide, but may be taken at 5′·2″. The working alley *e* should be 20″ to 22″, the back one *f* 16″ to 18″, and the end passage *g* 24″ wide; therefore, taking the narrowest looms, we have 3′·6″ × 2 = 7′·0″ + 20″ + 16″ = 10′·0″ from centre to centre of pillars in lines running from east to west. For a 4′·0″ loom at least 11′·4″ should be allowed, but in some new sheds filled with narrow looms as much as 12′·9″ is provided. Broad looms with two or three warp beams require 14′·4″ to 14′·6″ space from pillar to pillar. Looms placed in the same shed are sometimes of such varied lengths that it is out of the question to attempt to fix them so that they will relatively occupy a fixed position to the pillars. Pillars in lines from north to south are, as a rule, 15′·0″ to 20′·0″ apart, but a new system is being introduced by which their number is greatly reduced; thus, instead of arranging them—say, 11′·0″ by 16′·9″ apart as in the old plan, they become 22′·0″ by 33′·6″ apart. This necessitates supporting alternate lines of shafting from the roof, and strengthening both roof beams and pillars to guard against vibration. But it is obviously a much easier matter to arrange looms of different lengths in a shed of the new than in one of the old type, and it also facilitates the carrying of warps.

Columns have a uniform arrangement, except where

Digitized by Google

main passages run entirely through the building; these latter are sometimes against one, sometimes against both end walls; at other times a wide passage runs down the middle of a shed. At least 4′·0″ should be allowed for each.

A top light is always used in weaving sheds, and the roof windows *h* run from east to west to give a northern light, which is the greatest, steadiest, best adapted for imparting a uniformity of temperature, and preventing the sun from being troublesome. Roofs are made of wood or iron, and each column is cast in the form of a shoe *i* to take horizontal beams *j* that run from north to south. These beams bind columns and walls together, and also support the roof. Cast-iron gutters *k* rest immediately over the pillars, but are at right angles to beams *j*, and are connected to parts *l*, that make an angle approximating to 65° with the water level; such parts carry the upper portions of the roof, the gable of which forms a right angle. The steep portion is glazed and serves to keep the snow from collecting upon it in winter, and prevents the sun from shining in too freely in summer. In large sheds it would be next to impossible to remove water fast enough during storms, if the only outlets were at the walls, therefore the hollow columns are utilised for this purpose, and drain-pipes are run beneath the floor to carry the water away. It is questionable whether this system is the best, for in addition to the difficulty experienced in getting at the drains to clean them out, there is always a liability for water to find its way to shafting and bearings. Another plan for removing rain water from shed roofs is by fixing pipes under the gutters and parallel with the beams; they are small in diameter where water is first received, but increase in area at each succeeding bay, in proportion as the

Digitized by Google

volume of water increases, and small manholes are provided at intervals which allow the pipes to be cleaned out readily.

The main driving shaft *c* is always fixed against that wall termed the gearing wall, and it should be placed 12′·0″ to 13′·0″ above the floor line to work by bevel wheels all line shafts *m*—namely, those that run parallel with and between alternate rows of looms *n*. In most cases the last-named shafting is at right angles with the window lines, in order that the slays shall not throw shadows on the warps, and thus obstruct the weaver's light. Still sheds are geared with the shafting and gutters parallel. A shed is usually adapted for a given number of double rows of looms, but this plan requires an extra shaft, and some manufacturers prefer to have one or two single lines of looms set apart for their least skilled weavers.

Main shafts are driven by wheel gearing, by ropes, and less frequently by belts. Other things permitting, it is advisable to place the engine at or near the centre of the gearing wall, and elevate the engine bed until it is high enough to permit the power to be passed direct to the shaft by spur wheels *o*, *p*, or if the velocity is unsuitable, a short horizontal shaft is employed. The crank shaft of the engine and the main shaft are then parallel, and equal power will be transmitted from the latter on both sides of wheel *p*; or ropes may be employed, instead of tooth gearing, by leading them from the rope wheel of an engine round a rope wheel on shaft *c*. Every length of shafting diminishes in diameter in proportion to its distance from the point where it receives motion; its dimensions will depend upon the nature of the looms to be driven and the distance from support to support. Generally speaking, this shafting is stouter than that necessary for ordinary driving because of the very unsteady action of looms. Power is distributed to the various line

Digitized by Google

shafts through bevel wheels *q*, the diameters of which should be such as not only will impart the required velocity, but will enable the teeth of one to work by degrees in all the teeth of the other; a difference of one tooth is often sufficient to ensure this.

Line shafts may be driven direct from the engine if the latter is placed with its crank shaft parallel to those of the former, and if half the ropes are taken to pulleys on line shafts at one side, and half to those on the other side of the rope wheel, then by means of similar ropes and similar wheels every shaft in the shed can be driven.

A shed floor *r* is covered with heavy slabs of stone to give looms a firm base. Looms are made right and left handed, to bring the driving pulleys together, and are placed back to back; they are formed into groups of four, and two rows are driven from one line shaft which is fixed to the pillars, and further supported by hangers from one of the roof beams. Each group is either driven by one broad drum *s* (20″ to 24″ wide by 15″ to 20″ in diameter) capable of carrying four driving straps, or what is often better, by two narrower drums fixed as close together as possible on opposite sides of the shaft bearings, each driving a pair of looms, by pulleys from 8″ to upwards of 18″ in diameter, according to revolutions of line shaft and required speed of loom. Loom ends should be fixed parallel to give straight lines of machinery. In order that this result may be attained, the crank shaft of one loom is made longer than that of its fellow by at least the width of both driving pulleys. It is essential that all shall be parallel with the line shafts, hence measurements are made from them. The usual method of procedure is to drop a plummet from different points along the first shaft, and where it touches the floor to make a permanent mark

Digitized by Google

Digitized by Google

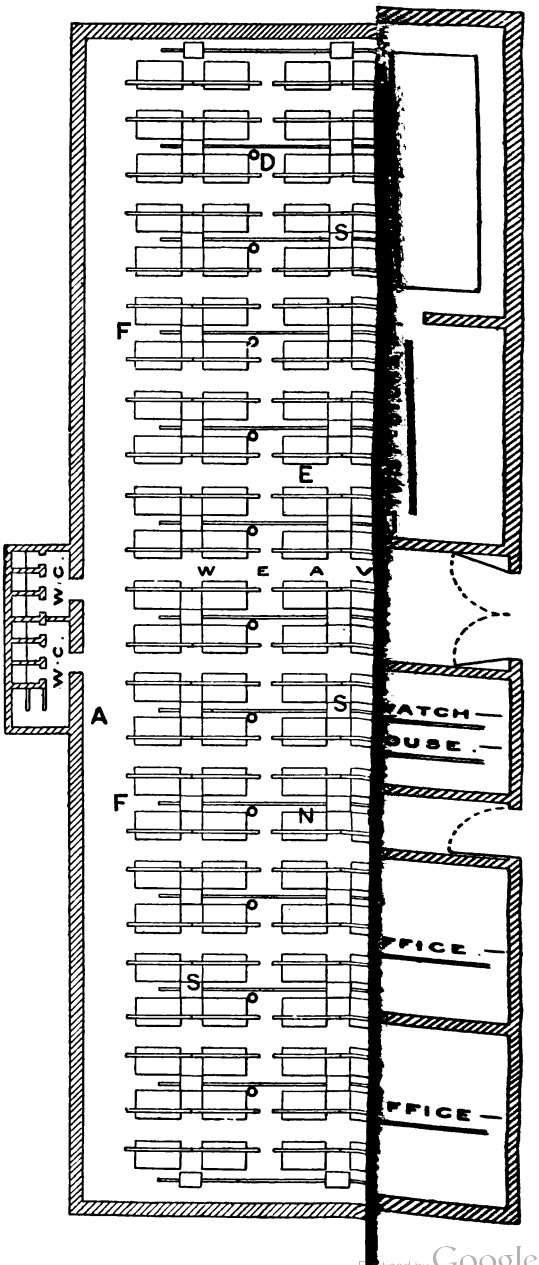

Digitized by Google

with a chisel; then to chalk a cord, stretch it over two marks, lift it at the centre a few inches above the flags, and let it go suddenly, when a straight white line will be visible on the floor; it must be made to extend the whole length of the building. Other similar lines may be made below alternate shafts, and afterwards a line is drawn at right angles by means of a piece of light wood 10′·0″ to 12′·0″ long, through which a nail is driven near each end. The rod is placed longitudinally over a chalk line and the position of each nail marked. From one mark an arc of a circle is described on both sides of the line, then from the other two more arcs are produced to cut the first pair, and the points of intersection are used as centres through which a chalked cord is to be stretched to make the line sought. From these lines the positions of the loom feet can be obtained, care being taken to fix them so that the pillars will not obstruct the back alleys more than necessary. A long straight-edge is laid upon the loom in various positions, with a spirit-level on the top of it, to see whether or no packing is required beneath the feet; if so, thin pieces of flat wood are cut to the required size, the positions of the foot holes marked, the loom removed, and holes are drilled in the flags, into which dry wooden pegs are driven tight; the loom is then put back into position, and long nails are driven through the feet into the wooden plugs, the latter swell with the moisture of the floor and securely hold the loom.

Calculations for speeds are of the simplest description, therefore two examples will be sufficient to clearly show the method of procedure. First, to find the diameter of drum required to drive a loom at the rate of 200 revolutions per minute, if its pulley is 9″ in diameter, and the line shaft makes 130 revolutions per minute—

Digitized by Google

130 : 200 : : 9 : 13·9. Answer 13·9″.

Second, if a line shaft makes 140 revolutions per minute, and is furnished with a drum 15″ in diameter, what diameter of loom pulley will give 220 picks per minute?—

220 : 140 : : 15 : 9·55. Answer 9·55″.

Many other small matters require close attention, but they can only be properly dealt with as they arise in practice. There are few industries, if any, of which it can be said with greater truth than of weaving, that success depends upon strict attention to detail.

Digitized by Google

INDEX

ACTION of Bonelli's Jacquard, 175
of a Jacquard, 133
of a loose reed motion, 322
of single lift negative dobby, 83
of stocks and bowls, 74
of stocks and bowls, with closed shedding motion, 74
of stocks and bowls, with open shedding motion, 79
of tappets, 25
of weft fork, 354
Advantages of a cross-border Jacquard, 156
of Crossley's Jacquard, 144
of double lift dobbies, 96
of open shedding, 21
of oscillating tappet, 56
of Shaw's drop box motion, 411
of shedding with healds, 3
of a twilling Jacquard, 168
of tying below a comber board, 189
of Verdol's Jacquard, 164
Aggregate motion in a shuttle, 271
Aim of inventors of modern picking motions, 265
Ainsley's Jacquard, 138
Altering speed of loom, effect on shuttle, 277
Antifriction bowls, 38
Application of cranks to the loom, 336
Archer's dobby, 86
Arrangement of columns in weaving sheds, 458
Attachment for stopping a revolving box motion when a weft breaks, 426
Automatic reading-in machine, attempts to produce, 241
Automatic repeater card-cutting machine, Devoge and Co.'s, 236
repeater card-cutting machine, M'Murdo's, 238
repeater card-cutting machine, Nuttall's, 239
shuttle guards, 329
warp weighting motion, Schilling's, 372
warp weighting motion, Hanson and Crabtree's, 374

BANNISTER harness, 203
Barrel for weaving cross borders, 47
tappet, 45
Beams and rollers to be parallel, 369
Beating up, 332
up by compressed air, 333
up by flat springs, 332
up, position of parts, 338
up, power of slay, 345
Bessbrook Jacquard, 167
Bevel of race board, 347
Blackburn dobby, 97
Bonelli's Jacquard, 172
Box motions, 393
motion, flat tray, Dr. Cartwright's, 393
motion, inside segment of circle, 393
motion, outside segment of circle, 393
Boyd's centre selvage motion, 444
Brake, Haythornethwaite's, 359
ordinary, 357
Brakes, 357

Digitized by Google

Buffers, 312
Building rods, 185
Bullough's trough and roller temples, 428
Burnley dobby, 107
Bury's flexible chains for centre selvages, 437
Butterworth and Dickenson's dobby, 107

Calculations for consumption of whip threads, 263
for order of knitting healds, 15
for power consumed in picking, 299
for rate of knitting healds, 15
for speeds of looms and shafting, 463
for speed of tappets, 59
to determine amount of eccentricity in a slay, 340
to find the size of taking-up wheel, 384
Cams to give an eccentric motion, 36
Card cradles, 250
cutting, 227
cutting, with punches arranged by hand, 228
lacing, hand frame, 247
lacing machines, Reid, Fisher, and Parkinson's, 248
lacing machines, the Singer Co.'s, 249
lacing twine, 248
saving Jacquards, 156
Cards to fall over loom end, 183, 187
to fall over warp, 183, 187
wiring, 249
Carpet pick, 288
Catch threads with mail, cam, and lever, 448
Centre of gravity in a shuttle, 267
shed dobby, 95
shed Jacquards, 138
shedding, 19
shedding compared with stationary bottom shedding, 20
selvages, 436
selvage motion of French origin, 440
selvage motion, Shorrock and Taylor's, 438
Centre selvage motion for continuous twisting, Boyd's, 444
selvage motion for continuous twisting, Sir Titus Salt's, 442
weft fork, 361
Centred tie harness, 195
Chains *versus* ropes for weighting warps, 369
Changing a driven wheel in taking-up motions, 386
Check-strap, 311
method of attachment, 312
Cheetham and Sutcliffe's open shed Jacquard, 152
Christy's positive dobby, 110
Circle frame, movement of, 317
Circles, 317
Circular boxes, 423
Clasped healds, 5
Classification of Jacquards, 121
Closed shedding, 18
Collier, Evans, and Riley's swell, 318
Columns in weaving sheds, 458
Comber board composed of slips, 180
board, solid, 180, 201
Combination of positive and negative parts for delivering warp, Smith Brothers, 374
Comparative consumption of power when picking from the crank and bottom shafts, 288
Comparison of reeds, 351
of semi-open shedding with other methods, 22
Compound harnesses to save cards, 199
Jacquards, 162
reversing motions, 68
tie harnesses, 197
Cone pick, 296
Connecting harness threads to tail cords of Jacquard, 185, 189
Construction of cone-picking tappet, 302
of curved plate for lever pick, 282
of Jacquard lifts, 176
of lappet wheels, 254
of lappet wheels, Scotch make, 261
of negative tappets, 40
of positive tappets, 47
of reed, 350

Digitized by Google

Continuous taking-up motions, 387
Cords instead of Jacquard hooks, 135
Coupling, 179
Cover on cloth, 38, 450
Cowburn and Peck's box motion, 416
Cranks for beating up, 336
Cross-border Jacquards, 157
Crossley's Jacquard, 141

Davenport and Crossley's cross-border Jacquard, 157
Dead weight as a reversing motion, 62
Decked dobbies, 88
Defects of clasped healds, 6
of closed shedding, 19
of Crossley's Jacquard, 145
of dead weights for moving healds, 63
of eccentric drop box motions, 415
of Jacquard shedding, 192
of negative picking, 266
of ordinary brake, 358
of single lift negative dobby, 84
of springs as reversing motions, 63
of tappet shedding, 27
of weight and rope system of governing warp, 367
Depth of shed, to find, 30
Design of end framing of loom, 448
Detectors for double cylinder Jacquards, 148
Devoge's automatic card-repeating machine, 236
Jacquard, 141
stop motion for double cylinder Jacquard, 151
Diggle's box motion, 394
Dimensions of columns in weaving sheds, 458
of cranks, 452
Division of parts of loom, 3
Dobbies, right and left hand, 94
with horizontal movement in cylinder, 81
with movable needle plate, 88
with rotary movement in cylinder, 90
with swinging movement in cylinder, 89
with vertical movement in cylinder, 88
Dobby, Blackburn, 97
Butterworth and Dickenson's, 107
Christy's, 110
Hattersley's, 102
lags, 93
Lupton and Place's, 107
pegs, 93
positive open shed, Knowles's, 113
reversing motion, 109
shedding, 79
Ward's, 102
Double equal plain tie harness, 201
lift dobbies, 96
lift double cylinder Jacquards, 146
lift single cylinder Jacquards, 138
picking bands, 310
shed Jacquards, 160
Doup harness, bottom, 216
harness, top, 222
harness in two sections, 223
Drafts, 12
Driving shafts, and gearing of weaving sheds, 461
wheels of looms, 452
Drop box motion, Cowburn and Peck's, 416
box motion, Diggle's chain, 394
box motion, Honegger's, 400
boxes, Kay's, 393
boxes, Knowles's, 403
boxes, to economise pattern chain, Shaw's, 410
boxes, Shaw, 405
boxes, Smith's modification of Diggle's chain, 398
and revolving boxes compared, 426
Dwell of tappet, 37

Eccentric drop box motion, Hacking and Co.'s, 411
drop box motion, Whitesmith's, 411
Eccentricity in a slay to be of value in weaving, 338
Effect of coiling ropes round beam ruffles, 370
of connecting arms on movement of slay, 340
of dipping the slay and bending the reed, 304
of high speeds on a pick, 298

Digitized by Google

Effect of tappet treadle on movement of healds, 42
of treadle bowl on movement of healds, 38
of weight on the movement of a shuttle, 267
of worn parts of fast reed motion, 322
on shuttle of weft coiled on the tongue, 270
Electric Jacquard, 172
Elliptical wheels to give an eccentric motion, Dr. Cartwright's, 333
Equal compound harness, 197
Essentials of a good pick, 274
Estimate of wasted force in picking, 274
Eyed healds, 7, 11

FARRELL'S automatic shuttle guard, 329
Fast and loose reeds, 318
Figuring harness, 179
Fixing comber board in position, 182
of tappets on loom, 25
Flexible chains as doups for centre selvages, Briggs Bury's, 437
Force of picking, 288
Fork and grid, 353
Framing of loom, 448
Frogs, 320

GAUZE drafts and ties, 209, 211, 219, 222, 225
harness for bottom doup, 216
Jacquard, 218
produced with beads, 211
produced with needles, 212
reed, 213
weaving, 209
woven with double lift shedding motions, 220
Goos's Jacquard cylinder motion, 127
Jacquard hook, 136
Greek healds, 4
Green and Barker's stop motion for double cylinder Jacquards, 149
Guides to a shuttle, 268

HACKING and Co.'s eccentric drop box motion, 411
Hahlo, Liebreich, and Hanson's spring-easing motion, 66
Hall and Son's semi-automatic guard, 327
Hamblet and Clifton's semi-automatic guard, 329
Hanson and Crabtree's automatic warp weighting motion, 374
Harker and Grayson's swell, 325
Harness building, 184
dressing, 191
tied above the comber board, 184
tied below the comber board, 189
Hattersley's dobby, 102
Haythornethwaite's brake, 359
Heald calculations, 12
making, 8
setting, 17
shedding, 3
sizing and varnishing, 8
twine, 7, 9
Healds, 3
order of knitting, 15
position of, 7
rate of knitting, 15
with mail eyes, 11
varying velocities of, 36
Height of Jacquard, 182
of loom framing, 449
Honegger's box motion, 400
Hooks pushed on griffe by blank in card, 86
Horizontal ring temples, 435
Howarth and Pearson's double-shed Jacquard, 160

INCLINED ring temples, 433
Introduction of dobby, 80

JACQUARD, Ainsley's, 138
Bessbrook, 167
Bonelli's, 172
Crossley's, 141
Devoge and Co.'s, 141
Goos's cylinder motion, 127
Lambert's, 139
Shields's, 167
Verdol's, 164
bottom board, 131

Digitized by Google

Jacquard cards, 121
cards, two patterns on one set, 162
catches, 125
cross - border, Davenport and Crossley's, 157
cylinder, 122
cylinder motions, 124
double shed, Howarth and Pearson's, 161
griffe, 132
heel rack, 129
hook, Goos's, 136
hooks, 131
lifting tackle, 141
lifts, 176
machine, parts invented by Jacquard, 120
mails, 180
neck cord, 131
needle board, 129
needles for single lift machine, 127
open-shed, Cheetham and Sutcliffe's, 153
shedding, 119
single acting, 122
spring box, 129
ties, 193
Jamieson's tappet, 43

KEIGHLEY'S letting-off and taking-up motions, 376
Kenyon's under motion, 67
Knowles's positive open-shed dobby, 113

LAPPET feelers, 252, 258
needle frame, 256
pin frame, 257
shedding, 250
slay, 251
slay, Scotch make, 260
tension cords, 259
wheel, 253, 260
Leading hook of Jacquard, 187
Length of picking arm, 300
of picking band, 309
Letting-off motions, 365
Levelling apparatus for dobby, 117
apparatus for healds, 21
Lever pick, 280
pick for pick and pick motion, 283
Lift of tappet, to find, 30
Lifts for compound Jacquards, 179
Lingoe, 179
Link-saving motion for drop boxes, Cowburn and Peck's, 420
Locking motions for double cylinder Jacquards, 148
Long picking bands, 310
Loose reeds, 322
Lupton and Place's dobby, 107
Lyall's positive picking motion, 305

MAIL, 180
Manual repeating card - cutting machines, 229
Marriott's semi-automatic shuttle guard, 328
M'Murdo's automatic repeating card-cutting machine, 238
Metallic clips for heald eyes, 10
Method of determining the amount of eccentricity in a slay, 341
of determining the variation in lift of harness, 192
Methods of attaching picking bands to loom, 310
of checking rotation in shuttles, 268
of supporting swivel shuttles in frame, 314, 316
Mixed tie harness, 197
Modern system of arranging columns in weaving sheds, 459
Modification of Jacquard hook, 135, 136
of Jacquard needle, 135, 141
Modifications of Jacquard machine, 134
of the Bessbrook Jacquard, 169
of weight and rope warp governing motions, 368
Motion of shuttle desirable, 276
Mounting thread, 182
Movement of a shuttle, 271
Movements of loom, 3

NATURE of movement in healds, 36
Neck cords, 131
Needle board, 129
frame for lappets, 256
Negative dobbies, 81
or drag taking-up motions, 388

Digitized by Google

Negative drop boxes, 394
drop boxes, Diggle's chain, 394
drop boxes, Honegger's, 400
drop boxes, Knowles's chain, 403
drop boxes, Smith's modification of Diggle's chain, 398
picking, 278
tappets, 40
Nuttall's automatic repeating card-cutting machine, 239
chain tappet, 57

OPEN-SHED dobbies, 105, 113
shed harness, Wilkinson's, 226
shed Jacquards, 152
shedding, 21
Ordinary Jacquard harness, with doup added, 215
Oscillating tappet, 54
Over and under motions, 61
Over-picks, 296

PARTS of a loose reed motion, 322
of a loom regulated by cranks, 335
used to move healds, 24
Piano card-cutting machine, 241
Pick, carpet, 288
cone, 296
Jackson's, 285
Lyall's, 305
revolving scroll, 293
stationary, 291
swivel, 290
Yates's, 290
and pick motions, 283, 287
to impart a push instead of a blow to the shuttle, 278
Pickers, 307
materials used in their manufacture, 308
treatment after delivery at mill, 308
Picking, 265
arm, 265, 280, 286, 289, 296, 300, 453
bands, 309
from the crank shaft, 288
motion, Kay's, 265
Pin frame for lappets, 257
Placing Jacquards over looms, 183
Placing looms in position in weaving sheds, 462
Plain side selvages, 445
side selvages, with boat, 445
side selvages, with mails, cam, and lever, 447
Points to be considered before constructing a tappet, 29
Position of closed warp line with stocks and bowls, 75
of coupling knot, 187
of healds in loom, 7
of parts for beating up, 338
of preparatory machinery, 457
of slay when reed and fabric are in contact, 347
of slay swords to strike the fabric at right angles, 347
of tappet on loom, 25
of treadle fulcrum, 42
Positive beating up, 333
dobby, Christy's, 110
dobby, Knowles's, 113
drop boxes, 405
drop boxes, Shaw's, 405
let-off and take-up motions, Keighley's, 376
motion to shuttle, 276
pick, Lyall's, 305
picking, 305
taking-up motion, intermittent, 381
tappets, 47
Power of slay to beat up, 345
loom, introduction, 1
Pressure harness, 206
Principal motions of loom to be connected positively, 277
Principle of reversing motions, 62
Principles of dobby shedding, 80
of shedding, 18
Proportioning heald twine to reed and warp, 9
Pulling catch of taking-up motion, 384

RANGE of dobby shedding, 24
of heald shedding, 23
of Jacquard, 120

Digitized by Google

Reading-in and repeating card-cutting machine combined, 232, 234
in card-cutting machine, 230
Reasons for slow development of power-loom, 1
Reed calculations, 351
Reed used in place of a comber board, 181
Reeds, 349
Reid, Fisher, and Parkinson's card-lacing machine, 248
Relative consumption of power by spring and weight, 65
consumption of power by stocks and bowls and weights, 69
Removal of rain water from roofs of weaving sheds, 460
Requirements of a box motion, 394
of a good letting-off motion, 365
Reversing motions, principles of, 62
Revolving boxes, 423
Rule for determining length of stroke to be given to a slay, 345

SALT'S centre selvage motion, 442
Schilling's automatic warp weighting motion, 372
Scroll pick, revolving, 293
pick, stationary, 291
tappet, 61
Self-acting temples, Dr. Cartwright's, 427
Semi-open shedding, 22
Separate driving for dobby cylinder, 86
Setting a weft fork, 355, 456
of check strap, 312, 455
of loose reed motion, 324, 456
of pick, 453
of stop-rod blades, 321, 456
of taking-up motion, 383, 456
of temples, 433, 457
of weft fork tappet, 356, 456
Shakers, 221
Shape of picking tappet face, 301
Shaw's box motion, 405
Shedding, principles of, 18
Shields's Jacquard, 167
Shorrock and Taylor's centre selvage motion, 438
Short picking bands, 310
Shuttle boxes, timing of, 456
guard, automatic, Farrell's, 329
guard, semi-automatic, Hall and Sons', 327
guard, semi-automatic, Hamblet and Clifton's, 329
guard, semi-automatic, Marriott's, 328
guards, 326
guards, automatic, 329
guards, rigid, 326
boxes governed by shedding motion, 113, 403
Shuttles of equal weight and size, 277, 454
Singer Co.'s card-lacing machine, 249
Single-acting Jacquard, 122
acting reversing motions, 62
lift negative dobby, 81
picking bands, 310
roller temples, 430
roller temples for distending a fabric, 431
Sizes of driving wheels, 452, 463
Slay to swing from top framing of loom, 347
Slays with compound beats, 348
Smith Brothers' automatic letting-off motion, 374
Space between shaft centre and thin part of tappet, 35
Speeding of looms, 345
Split, or double scale harness, 203
Spring box, 129
easing motion, Hahlo, Liebreich, and Hanson's, 66
reversing motions, 63
tension cords for lappets, 259
Springs of equal strength, 455
Stocks and bowls, 68
Stop motion for double cylinder Jacquards, Devoge's, 151
motion for double cylinder Jacquards, Green and Barker's, 149
rod, 320, 321
Straight tie harness, 193
Strain upon warp in shedding, 34
Strapping, 309

Digitized by Google

Swell, Collier, Evans, and Riley's, 318
Harker and Grayson's, 325
Swells, fast reed, 318
Swivel shuttle, 315
shuttles moved by rack and pinion, 316
weaving, 313
weaving, process of, 314
weft, tension on, 315
Swivels and lappets compared, 313

TABLE showing movement of crank, 343
Taking-up motions, 380
motions governed by the reed, 391
Tappet, barrel, 45
driving, 58
Jamieson's, 43
Nuttall's chain, 57
oscillating, 54
position of, 25
positive, 47
shedding, 24
Woodcroft's, 49
Temples, 427
horizontal ring, 435
inclined ring, 433
single roller, 430
three roller, 432
two roller, 432
use of, 427
Tension on swivel weft, 315
Tie-ups, or cording plans, 29
Time of picking, 301, 453
Timing and fixing of parts of loom, 448
of shuttle boxes, 456
Top doup harness, 222
light in weaving sheds, 460
Treadle fulcrum, position of, 42
Trough and roller temples, Bullough's, 428
Turning back bar for Jacquard, 143
Twilling Jacquard, 168
Twine loops, as doups, for centre selvages, 437

UNDER motion, Kenyon's, 67
picks, 278
Unequal compound harnesses, 197
Use of shakers, 221
Uses of a dobby, 24
of a Jacquard, 120

VALUE of a tappet for shedding, 24
Velocity of shuttle, varying, 273
Verdol's Jacquard, 164
Vertical punch, reading-in and card-repeating machine, 234

WARD's dobby, 102
Warp beam, 368
line, 450
Warped harness, 190
Warping harness threads, 184
Waste of power in picking, attempts to reduce, 275
Weaving rooms or sheds, 457
shed floors, 462
shed roof, 460
shed walls, 457
Weft fork, and grid, 353
stop motions, 352
stop motion, Dr. Cartwright's, 353
Weight and rope governing motion for warp, 366
Whitesmith's box motion, 411
Width of loom framing, 449
of passages in weaving sheds, 459
Wilkinson's open-shed harness, 226
Wire healds, 10
Woodcroft's tappet, 49
tappet connection with healds, 53
tappet for open shedding, 51
tappet ring, 50

YATES's pick, 290

Printed by R & R. CLARK, *Edinburgh.*

Digitized by Google

WILSON BROTHERS LIMITED,

CORNHOLME MILLS, TODMORDEN.

(ESTABLISHED 1823.)

Largest and most complete Bobbin and Shuttle Works in the World.

18 Awards for Excellence of Manufacture.

SHUTTLE DEPARTMENT.

WILSON BROTHERS, LIMITED, make Shuttles in Boxwood, Cornel, Persimmon, Fruit-Tree, etc.

The Blocks are all carefully selected and well seasoned. Every care is taken to produce goods of the best possible description, and embodying the latest improvements, so as to meet the varied requirements of our clients.

Shuttle Tongues.—Wilson Brothers, Limited, have given special attention to the production of a Shuttle Peg as nearly perfect as possible. In order to overcome numerous difficulties they now make their own forgings. Every bar is tested before being forged, and only the best quality is used. A special machine has been designed by means of which pegs are being supplied as accurate in diameter as Ring Spindles.

ACCESSORIES.

Shuttle Pegs in Iron, Steel, or Brass. Shuttle Pegs neatly repaired.
Shuttle Springs, Catches, and Wood Guards.
Shuttle Pirns and Weavers' Bobbins in Boxwood, Beech, etc.
Shuttle Pirns fitted with Holden's Patent Brass Tip, by which the Pirns are prevented from splitting and the tips are kept smooth.
Shuttle Pins in Boxwood, Lignum Vitæ, or Ebony, also in Iron, Steel, or Brass.
Picking Sticks and Picking Band Pegs.
Warping Creel Pegs and Warping Creel Steps. Beam Wedges.

PATENT WARPING OR WINDING BOBBINS.

These Bobbins are fitted with our Patent Steel Binder, which is novel in construction and is a perfect protection to the flanges. The Patent Binder makes it impossible for the flanges to open or come loose, and does not add materially to the weight of the Bobbin.

It is applicable to Bobbins with flanges from 2 inches up to 18 inches diameter, and by its use there is a great saving of waste yarn through the prevention of broken flanges. Bobbins with these Patent Steel Binders have been in use for many years, and have met with unqualified success.

ORIGINAL INVENTORS AND MAKERS OF

STEEL AND BRASS-PLATED BOBBINS AND TUBES.

We make a Speciality of **Light Cardroom Tubes,** with small diameters for fine counts. We have excellent facilities for cutting, seasoning, and partially preparing both Tubes and Bobbins before turning. We have large stocks of regular sizes always seasoning, the process occupying from two months up to two years. We are thus enabled to guarantee exact and uniform diameters.

We are the largest makers of Ring **Twist** Bobbins and Ring **Weft** Pirns. Every Bobbin is carefully balanced. Ring **Twist** Bobbins, with Wilson Brothers' Patent "C" Shield, are the strongest Bobbins in the market, and are capable of resisting 150 per cent more pressure than plain Bobbins.

Office and Showrooms (Open Daily): 14 Market Place, Manchester.
Branch Works: Garston, Liverpool.

*

Digitized by Google

LAMBETH COTTON ROPES.

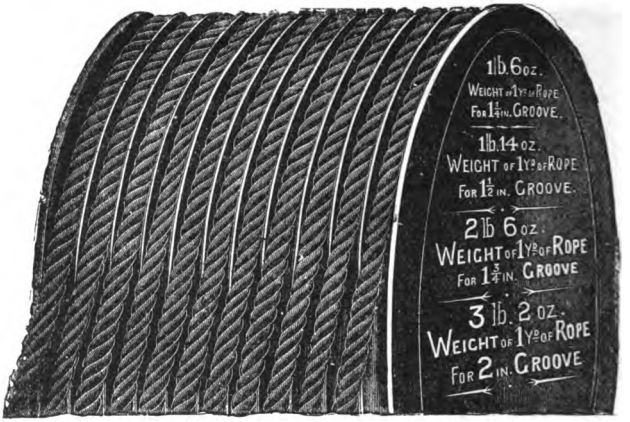

They are firmly made and very solid, containing more actual yarn for a given diameter than is usual; and being made from pure Egyptian Throstle Yarn, without any weighting material, are light in weight.

Also DRUM, RIM, SCROLL, SPINDLE, RING SPINDLE, TAPE, and TUBULAR BANDINGS to any description for Cotton Mills.

THE LAMBETH COTTON ROPES are of unique design and construction, superseding all other Cotton Ropes for Main Driving.

Tension and Friction accurately measured for and provided against, and the Ropes fitted exactly to the working part of the grooves of the pulley.

A LARGE STOCK OF ALL SIZES KEPT TO MEET URGENT ORDERS.

THE LAMBETH TRADE MARK HART COTTON ROPE

NOTE.—These ropes are made at my works alone, and are only genuine when bearing my Registered Trade Mark.

THOMAS HART, BLACKBURN.

ESTABLISHED 1789.

Telephone No. 10. **Telegraphic Address: "HART, BLACKBURN."**
(A B C Code used.)

Digitized by Google

TECHNICAL HANDBOOKS.

PRIMER of HYGIENE. By ERNEST S. REYNOLDS, M.D. Lond. Pott 8vo. 1*s.*

ELEMENTS of HANDICRAFT and DESIGN. By W. A. S. BENSON, M.A. Oxon. With Illustrations. Extra Crown 8vo. 5*s.* net.

"It is a solid, practical work—practical always with an intellectual as well as a merely educational side to it."—*School Board Chronicle.*

DRAWING and DESIGN. A Class Text-Book for Beginners. By E. R. TAYLOR, Headmaster of the Birmingham Municipal School of Art. With Illustrations. Oblong Crown 8vo. 2*s.* 6*d.*

"All the lessons are nicely calculated to cultivate eye, hand, and taste. . . . We have never seen a book of instruction for beginners comparable to this. It ought to be in the hands of every young person in the land."—*Birmingham Daily Post.*

LEAD WORK. Old and Ornamental, and for the most part English. By W. R. LETHABY. With Illustrations. Extra Crown 8vo. 4*s.* 6*d.* net.

"We have in this little book of his the enunciation of principles of treatment and methods of working as exemplified in old examples of the craft."—*British Architect.*

A HANDBOOK of GOLD-MILLING. By HENRY LOUIS, Associate of the Royal School of Mines, Fellow of the Geological Society, etc. Crown 8vo. 10*s.* net.

"It is a valuable companion, and should be found on the shelves, not only of the man in charge of the mill, but also of the student and mining engineer."—*Mining Journal.*

WOOLLEN SPINNING. A Text-Book for Students in Technical Schools and Colleges, and for Skilful Practical Men in Woollen Mills. By CHARLES VICKERMAN, Author of "The Woollen Thread" and "Notes on Carding." With Illustrations. Crown 8vo. 6*s.*

"To those who have some knowledge of the matter, we cannot recommend it too highly. It is certainly the most practical treatise which has been produced."—*Bradford Observer.*

The GRAMMAR of WOODWORK. By WALTER E. DEGERDON, Head Instructor in Woodwork at the Whitechapel Craft-School. With a Preface by L. H. LLEWELLYN SMITH. 4to. Paper Covers. 2*s.*

"The order of work is clearly mapped out, and the book will be found to be most useful for reference at the bench. We warmly recommend it to the notice of all manual instructors."—*Schoolmaster.*

A TEXT-BOOK of NEEDLEWORK, KNITTING, and CUTTING-OUT, with Methods of Teaching. By ELIZABETH ROSEVEAR. With Original Illustrations and Sectional Diagrams. Second Edition. Revised and Enlarged. Crown 8vo. 6*s.*

"A very useful book of reference for teachers of elementary sewing classes."—*Saturday Review.*

NEEDLEWORK, KNITTING, and CUTTING-OUT, for Older Girls. By ELIZABETH ROSEVEAR. With Original Illustrations and Sectional Diagrams. Globe 8vo. Standard IV., 6*d.*; Standard V., 8*d.*; Standards VI., VII., and Ex-VII., 1*s.*

NEEDLEWORK. By ELIZABETH GLAISTER. Crown 8vo. 2*s.* 6*d.* [*Art at Home Series.*

MACMILLAN AND CO., LONDON.

Digitized by Google

TECHNICAL HANDBOOKS—*Continued.*

CUTTING-OUT and DRESSMAKING. From the French of Mdlle. E. GRAND'HOMME. With numerous Diagrams. Pott 8vo. 1*s.*

DRESSMAKING. By Mrs. HENRY GRENFELL. With Preface by Miss F. L. CALDER. Pott 8vo. 1*s.*

A PRIMER of DOMESTIC ECONOMY. By EDITH A. BARNETT and H. C. O'NEILL. Pott 8vo. 1*s.*

A PRIMER of AGRICULTURAL CHEMISTRY; or, the Food of Plants. By A. P. LAURIE, M.A., Fellow of King's College, Cambridge; Organising Secretary to the Bedfordshire County Council. Pott 8vo. 1*s.*

A PRIMER of PRACTICAL HORTICULTURE. By J. WRIGHT, F.R.H.S. Pott 8vo. 1*s.*

By Prof. HENRY TANNER, M.R.A.C., F.C.S.,
Examiner in the Principles of Agriculture under the Government Department of Science.

The ALPHABET of the PRINCIPLES of AGRICULTURE. Extra Fcap. 8vo. 6*d.*

FURTHER STEPS in the PRINCIPLES of AGRICULTURE. Extra Fcap. 8vo. 1*s.*

ELEMENTARY SCHOOL READINGS on the PRINCIPLES of AGRICULTURE for the THIRD STAGE. Extra Fcap. 8vo. 1*s.*

FIRST PRINCIPLES of AGRICULTURE. Pott 8vo. 1*s.*

ELEMENTARY LESSONS in the SCIENCE of AGRICULTURAL PRACTICE. Fcap. 8vo. 3*s.* 6*d.*

MACMILLAN'S COMMERCIAL CLASS-BOOKS.

Edited by JAMES GOW, Litt.D.,
Headmaster of the High School, Nottingham.

Globe 8vo.

The HISTORY of COMMERCE in EUROPE. By H. DE B. GIBBINS, M.A., Oxford University Prizeman in Political Economy, and Author of "The Industrial History of England." With Maps. 3*s.* 6*d.*

COMMERCIAL ARITHMETIC. By S. JACKSON, M.A., formerly Post Master of Merton College, Oxford; lately Master in the Nottingham High School; Headmaster of Victoria College, Congleton. 3*s.* 6*d.*

MACMILLAN AND CO., LONDON.

Digitized by Google

Digitized by Google

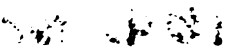

Digitized by Google

This book should be returned to the Library on or before the last date stamped below.

A fine of five cents a day is incurred by retaining it beyond the specified time.

Please return promptly.

AUG 20 '53H
AUG 24 '67 SS
1642868
CANCELLED
6800699
BOOK DUE-WID
CANCELLED
JUN 22 1980
MAY 22 1980
6770080
CANCELLED
BOOK DUE WID
MAY 1 1980
MAY 1 1980
CANCELLED
WIDENER
JUN 29 2003
MAR 07 2003
WIDENER
BOOK DUE

Digitized by Google
4 058 274 234